Cover Sheet

Riverton Motors Company

Riverton.010.Metal Building Addition

3750 Idaho Street
Elko, Nevada 89801

Sheet Index

Cover Page
A-0.01 – Site Plan
A-1.01 – Metal Building Framing Layout
A-1.02 – Metal Building Elevations
S-1.00 – Footing and Foundation Plan
S-5.00 – Structural Detail
S-5.01 – Typical Structural Detail
E-1 Cover Sheet
E-2 Roof Framing
E-3 Sidewall A (SWA)
E-4 Sidewall C (SWC)
E-5 Endwall B (EWB)
E-6 Sections/Details
E-7 Sections/Details
E-8 Frame Cross Section, Frame Lines 1 & 3
E-9 Frame Cross Section, Frame Line 2
E-10 Connection Detail
F-1 Anchor Rod Setting Plan
F-2 Reactions

Pre-Engineered Metal Building Calculations pg. 1-74

General Contractor
ENTELEN Design-Build, LLC
8707 Sandy Pkwy
Sandy, Utah 84070
801.542.8090

Structural Engineer
McNeil Engineering
8610 Sandy Pkwy, Ste 200
Sandy, Utah 84070
801.255.7700

Metal Building Engineer
Star Building Systems
8600 South Interstate 35 Service Road
Oklahoma City, OK 73149
405.636.2010

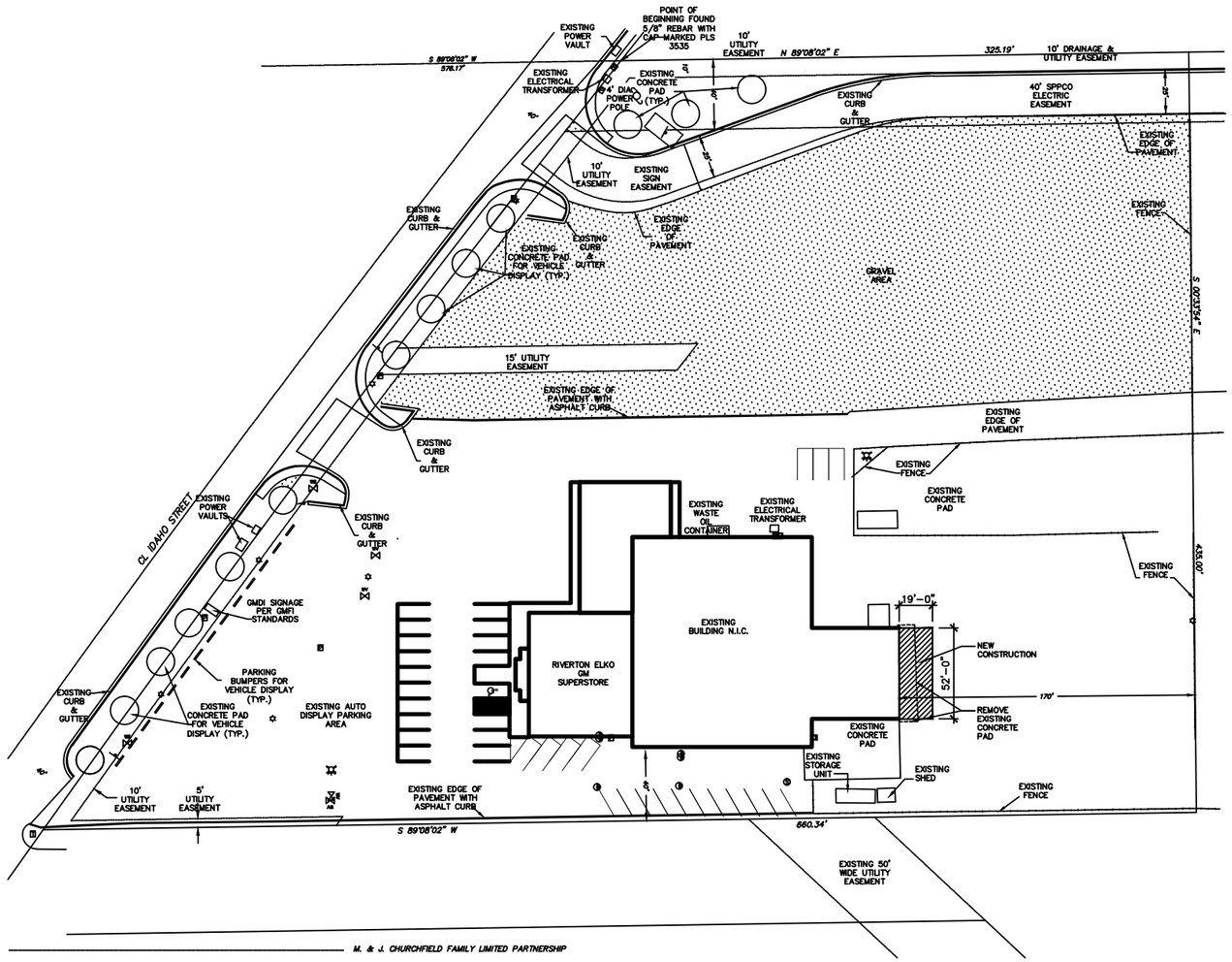

A1 OVERALL SITE PLAN

SCALE: 1" = 40'

0 20' 40' 80'

N

GENERAL NOTES

A. ALL DIMENSIONS OF THE BOUNDARIES SHOWN COINCIDE WITH THOSE OF RECORD.

B. THE SUBJECT PROPERTY IS LOCATED IN ZONE X, AREAS OUTSIDE THE 500 YEAR FLOOD PLAIN PER FLOOD INSURANCE RATE MAP FOR THE CITY OF ELKO, ELKO COUNTY, NEVADA, COMMUNITY–PANEL NO. 320010 0002 C.

C. THE SUBJECT PROPERTY IS CURRENTLY ZONED C – GENERAL COMMERCIAL. THERE ARE NO SETBACKS WITHIN THIS ZONING

D. THERE ARE 33 REGULAR PARKING SPACES AND 1 HANDICAP PARKING SPACE.

LEGEND

= FOUND 1/4 CORNER AS NOTED

= FOUND 5/8" REBAR WITH PLASTIC CAP MARKED PLS 5072 UNLESS OTHERWISE NOTED.

= EXISTING FIRE HYDRANT

= EXISTING WATER VALVE

= EXISTING WATER SPIGOT

= EXISTING POWER BOX

= EXISTING POWER METER

= EXISTING TELEPHONE PEDESTAL

= EXISTING GAS METER

= EXISTING SEWER MANHOLE

= EXISTING SEWER CLEANOUT

= EXISTING SIGN

= EXISTING BOLLARD

= EXISTING LIGHT

= EXISTING POWER POLE

= EXISTING PAVED AREA

ELKO PRE-MANUFACTURE

METAL BUILDING ADDITION
3750 IDAHO STREET
ELKO, NEVADA

REVISIONS

REV	DATE	DESCRIPTION
		SITE PLAN

PROJECT NO: .
DRAWN BY: .
CHECKED BY: .
DATE: 09/17/15
SHEET: OF .

SITE PLAN

A-0.01

C:\Users\Brian.MICHEL-GROUP\appdata\local\temp\AcPublish_6960\Site Plan.dwg Brian Sep 17, 2015 - 3:11pm

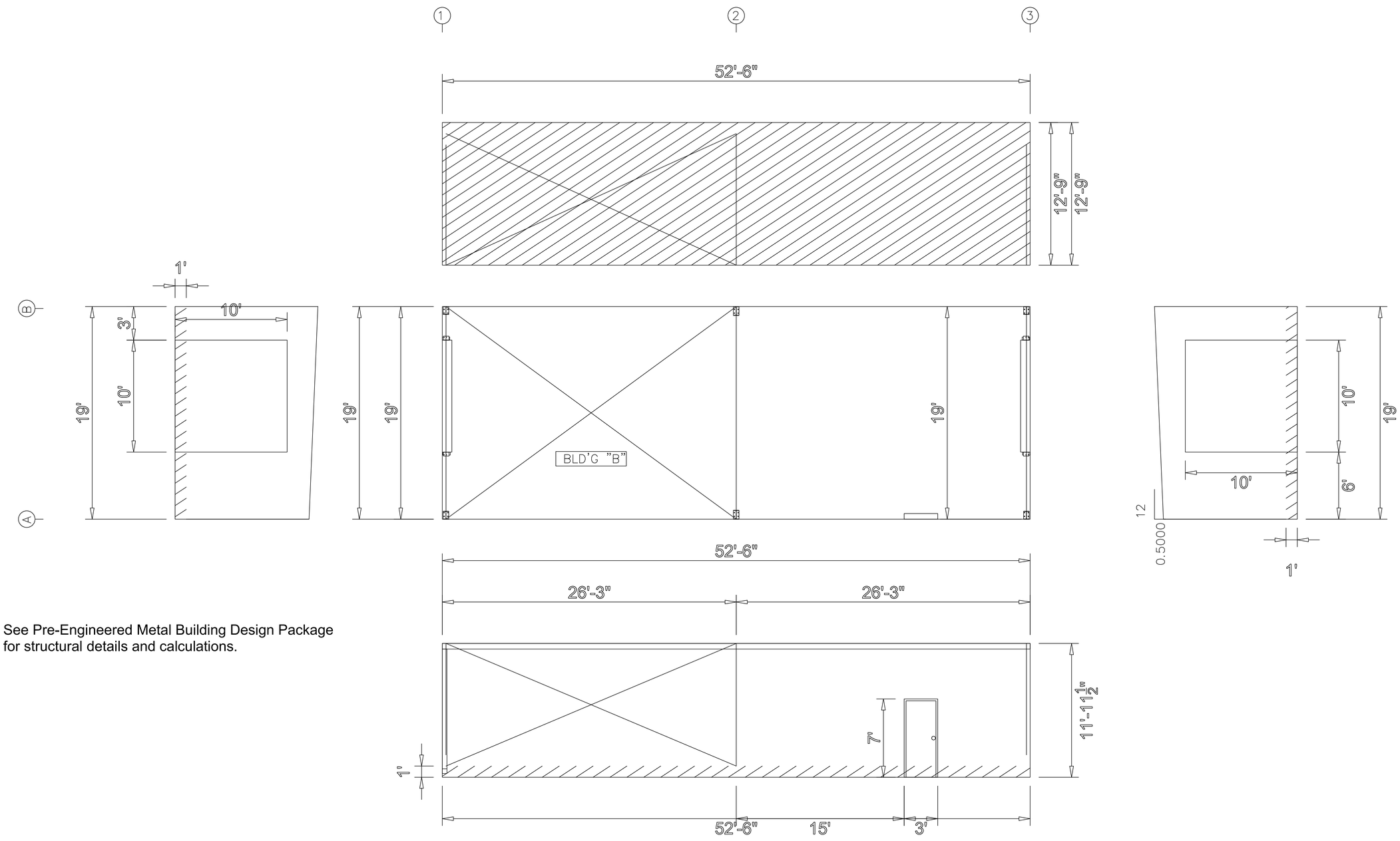

See Pre-Engineered Metal Building Design Package
for structural details and calculations.

2D BUILDING SKETCH - FRAMING AND BRACING

ELKO PRE-MANUFACTURED
METAL BUILDING ADDITION

3750 IDAHO STREET
ELKO, NEVADA

Scale: NOT TO SCALE

METAL BUILDING
FRAMING LAYOUT

A1.01

East Wall

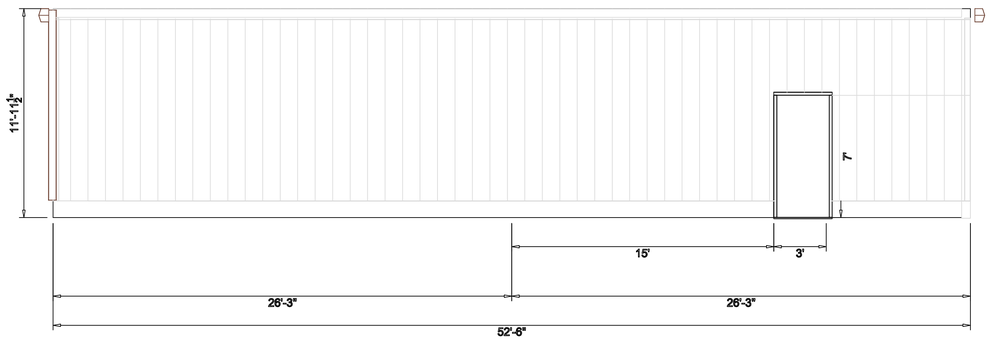

West Wall (Open to Existing)

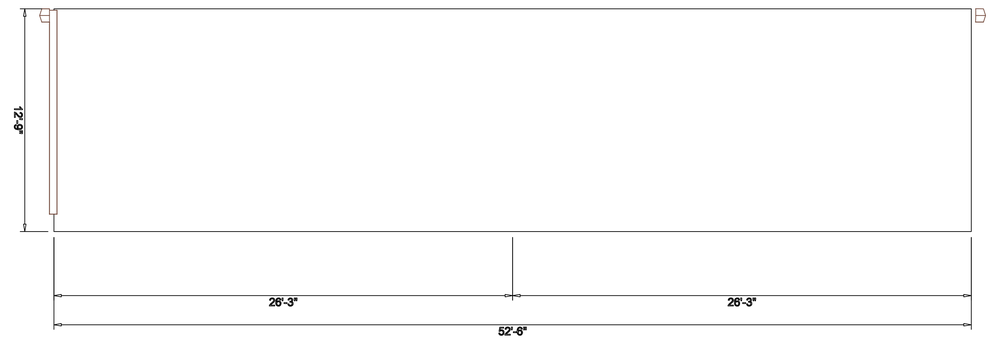

South Wall

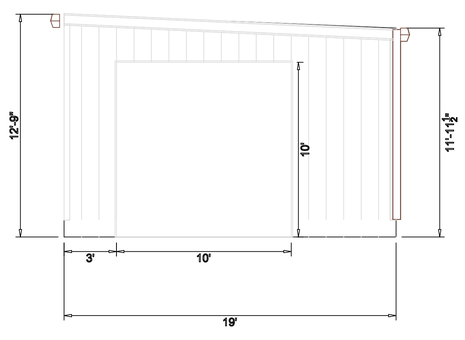

North Wall

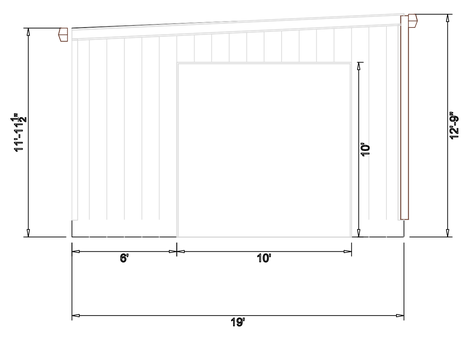

ARCHITECTURAL ELEVATIONS

ELKO PRE-MANUFACTURED
METAL BUILDING ADDITION

3750 IDAHO STREET
ELKO, NEVADA

Scale: NOT TO SCALE

METAL BUILDING
ELEVATIONS

A1.02

GENERAL:

UNLESS NOTED OTHERWISE, ALL WORK SHALL CONFORM TO THE REQUIREMENTS OF THE 2015 INTERNATIONAL BUILDING CODE. IT IS THE CONTRACTOR'S RESPONSIBILITY TO VERIFY ALL EXISTING CONDITIONS AT THE JOB SITE, AND TO FULLY COORDINATE ALL DIMENSIONS AND CONDITIONS OF DETAILS WITH OTHER DISCIPLINES. ANY FIELD CONDITIONS REQUIRING CONSTRUCTION THAT IS DIFFERENT FROM THAT SHOWN ON THE PLANS SHALL BE BROUGHT TO THE ATTENTION OF THE ARCHITECT. ANY CONFLICTING DETAILS SHOWN IN THE DRAWINGS SHALL BE BROUGHT TO THE ATTENTION OF THE ARCHITECT PRIOR TO THE CONSTRUCTION OF SAID DETAIL. DO NOT SCALE DRAWINGS. ANY QUESTIONS REGARDING THE CONSTRUCTION DOCUMENTS SHALL BE SUBMITTED TO THE ARCHITECT IN THE FORM OF A WRITTEN REQUEST FOR INFORMATION.

ALL SUPPORT OF CONSTRUCTION LOADS SHALL BE THE RESPONSIBILITY OF THE CONTRACTOR. ALL SHORING AND BRACING REQUIRED FOR THE PROTECTION OF LIFE AND PROPERTY DURING THE CONSTRUCTION PROCESS SHALL BE THE RESPONSIBILITY OF THE CONTRACTOR. ALL PROCEDURES OF SOIL EXCAVATION, BACK FILL, AND SUPPORT OF ADJACENT PROPERTY DURING EARTHWORK SHALL BE THE RESPONSIBILITY OF THE CONTRACTOR.

ALL DIMENSIONS INDICATED ON PLANS SHALL BE TO FACE OF STUDS, FACE OF CONCRETE BLOCK, FACE OF ROUGH CONCRETE, CENTERLINE OF COLUMNS, BOTTOM OF METAL DECK, AND TOP OF SLAB, UNLESS NOTED OTHERWISE. DIMENSIONS SHOWN ON STRUCTURAL DRAWINGS ARE TO BE COORDINATED WITH DIMENSIONS SHOWN ON THE ARCHITECTURAL DRAWINGS. ANY DISCREPANCY IS TO BE BROUGHT TO THE ATTENTION OF THE ARCHITECT PRIOR TO CONSTRUCTION.

FOUNDATIONS:

MAXIMUM ALLOWABLE SOIL PRESSURE: = 1500 PSF (ASSUMED)

ALL FOOTING DEPTHS INDICATED ON PLANS ARE MINIMUM DEPTHS. FOOTINGS MAY BE PLACED IN NEAT EXCAVATED TRENCHES. TRENCH SHALL BE APPROVED BY BUILDING OFFICIAL PRIOR TO PLACEMENT OF CONCRETE.

CONCRETE:

ALL CONCRETE MATERIALS SHALL COMPLY WITH THE STANDARDS SPECIFIED IN THE ACI 318-08 BUILDING CODE.

LOCATION -	SPECIAL INSPECT.	SLUMP (MAX)	AGGREGATE (MAX)	COMP. STRENGTH (PSI)
FOOTINGS	NO	5	1" DIA	3000 (2500 USED IN DESIGN)
STEM WALLS	NO	5	1" DIA	3000 (2500 USED IN DESIGN)
S.O.G.	NO	3-1/2"	3/4" DIA	3500 (2500 USED IN DESIGN)

USE OF CALCIUM CHLORIDE IS NOT PERMITTED IN ANY CONCRETE MIX. ALL OTHER ADDITIVES AND ADMIXTURES MUST HAVE THE WRITTEN APPROVAL OF THE ENGINEER.

ANY CONCRETE THAT FAILS TO MEET SPECIFICATIONS SHALL BE REMOVED AND REPLACED AT THE EXPENSE OF THE CONTRACTOR.

THE CONTRACTOR SHALL BE RESPONSIBLE FOR THE CONSTRUCTION, DESIGN, PLACEMENT AND REMOVAL OF ALL FORMWORK. ALL SHORING DURING PLACEMENT OF CONCRETE IS THE SOLE RESPONSIBILITY OF THE CONTRACTOR.

CONCRETE REINFORCING:

ALL REINFORCING BARS SHALL CONFORM TO ASTM A-615 GRADE 60, Fy=60,000 PSI MIN., UNLESS NOTED OTHERWISE. BARS SHALL BE TIED SECURE PRIOR TO PLACEMENT OF CONCRETE TO MAINTAIN PROPER PLACEMENT AFTER CONCRETE IS IN PLACE. LAP ALL BARS 40 DIAMETERS UNLESS NOTED OTHERWISE. SPLICE BARS ONLY WHERE SHOWN ON PLANS.

MAINTAIN THE FOLLOWING CONCRETE COVERAGES FOR CONCRETE REINFORCING:

UNFORMED SURFACES IN CONTACT WITH EARTH	3"
FORMED SURFACES IN CONTACT WITH EARTH	2"
FORMED SURFACES EXPOSED TO OUTSIDE WEATHER	2"
SLABS AND WALLS NOT EXPOSED TO WEATHER	1 1/2"
CLEAR DISTANCE BETWEEN BARS	2" U.N.O.

NOTES:

- LAYOUT AND LOADS BASED ON METAL BUILDING DRAWINGS (PROVIDED BY SURE STEEL) AND HAVE NOT BEEN VERIFIED BY MCNEIL ENGINEERING - REFER TO METAL BULDING DRAWINGS FOR DIMENSIONS, BASE PLATES, AND OTHER INFORMATION
- PROVIDE CONTROL JOINTS AT GRID LINES
- TOP OF CONCRETE ELEVATION FOR ALL BASE PLATES SHALL BE 511'-0"

FOOTING SCHEDULE

Type	WIDTH	LENGTH	d	REINFORCING CROSSWISE NO	SIZE	LENGTH	SPACING	REINFORCING LENGTHWISE NO	SIZE	LENGTH	SPACING	REMARKS
F-18	18"	CONT.	12"	-	-	-	-	(2)	#5	CONT.	EQ.	TYP. CONTINOUS FOOTING
FS-3	3'-0"	3'-0"	16"	(4)	#5	2'-6"	EQ.	(4)	#5	2'-6"	EQ.	SPOT FOOTING
FS-4	4'-0"	4'-0"	18"	(5)	#5	3'-6"	EQ.	(4)	#5	2'-6"	EQ.	SPOT FOOTING
FS-5	5'-0"	3'-0"	18"	(6)	#5	4'-6"	EQ.	(4)	#5	2'-6"	EQ.	SPOT FOOTING

FOOTING AND FOUNDATION PLAN KEY NOTES

#	
1	EXISTING CONCRETE SLAB
2	5" CONCRETE SLAB ON GRADE OVER 4" FREE DRAINING GRAVEL, PREPARE SUB-GRADE PER SOILS REPORT. SLOPE SLAB PER ARCHITECT
3	CONTROL JOINTS PLACE COL. TO COL. AND BETWEEN FOR A MAX SPACING OF 10' O.C., LAYOUT TO BE COORD AND APPROVED BY ARCH.
4	HAIR PIN TYPICAL AT COLUMNS

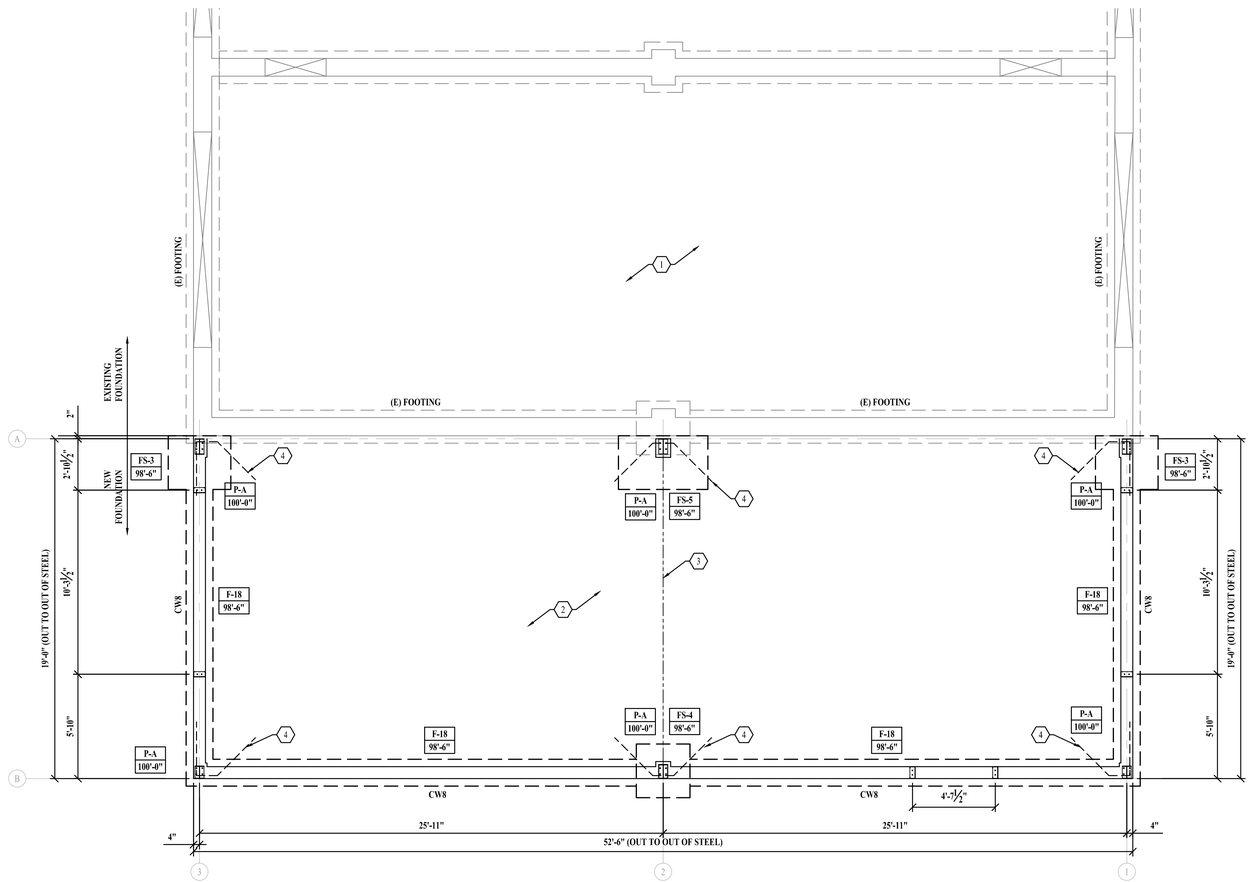

LEGEND

- TYP. IN WALL COL. CC1 U.N.O.
- FS-# / #'-#" — FOOTING SIZE, SEE S400; TOP OF FOOTING ELEVATION
- CJ — CONTROL JOINT, SEE NOTES.
- SLAB SLOPE CHANGE, SEE ARCH.
- SLAB STEP, SEE ARCH.
- # / ### — SECTION NUMBER; SHEET NUMBER SECTION IS LOCATED
- # / ### — SECTION NUMBER; SHEET NUMBER SECTION IS LOCATED
- # — KEYED NOTE
- OR — STEEL COL. SEE SCHEDULE
- FOOTING LINE; FOUNDATION LINE
- P-# / #'-#" — CONCRETE PIERS FOR PRE-MANUFACTURED METAL BUILDING, SEE SCHEDULE; TOP OF PIER ELEVATION
- CW-# — CONCRETE WALL SEE SCHEDULE

NORTH

FOOTING & FOUNDATION PLAN

SCALE 1/4" = 1'-0"

McNEIL ENGINEERING™
Economic and Sustainable Designs, Professionals You Know and Trust
8610 South Sandy Parkway, Suite 200 Sandy, Utah 84070 801.255.7700 mcneilengineering.com
Civil Engineering • Consulting & Landscape Architecture
Structural Engineering • Land Surveying & HDS

ELKO PRE-MANUFACTURE

METAL BUILDING ADDITION
3750 IDAHO STREET
ELKO, NEVADA

REVISIONS

REV	DATE	DESCRIPTION

PROJECT NO:	15437
DRAWN BY:	NSC
CHECKED BY:	BJW
DATE:	09/17/15
SHEET:	OF .

FOOTING AND FOUNDATION PLAN

S1.00

C:\Users\Brian.MCNEIL-GROUP\appdata\local\temp\AcPublish_1372\[15437_struct(09-10-15).dwg]Brian Sep 17, 2015 - 3:32pm

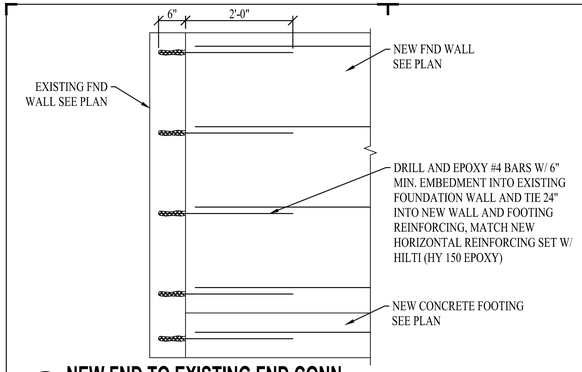

1-D S5.00 **NEW FND TO EXISTING FND CONN.**
N.T.S.

USE #5 FOR HAIRPINS TYP

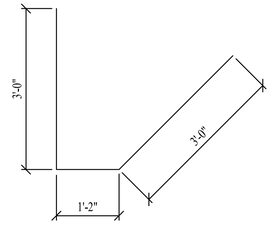

2-D S5.00 **CORNER HAIRPINS**
N.T.S.

3-D S5.00 **NOT USED**
N.T.S.

4-D S5.00 **NOT USED**
N.T.S.

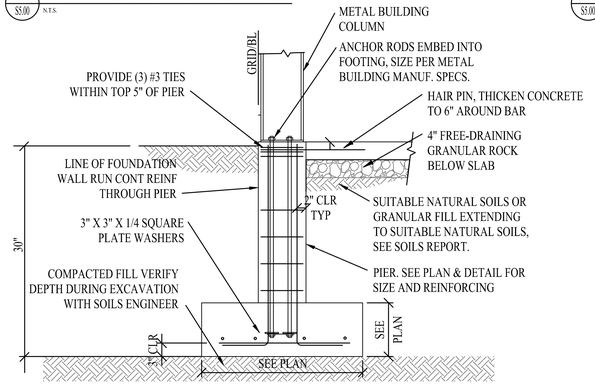

1-C S5.00 **TYPICAL PIER**
N.T.S.

USE #5 FOR HAIRPINS TYP

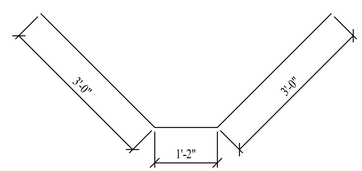

FOR OPTION #2
NO HAIRPIN
NO SLAB

2-C S5.00 **INTERMEDIATE HAIRPINS**
N.T.S.

3-C S5.00 **NOT USED**
N.T.S.

4-C S5.00 **NOT USED**
N.T.S.

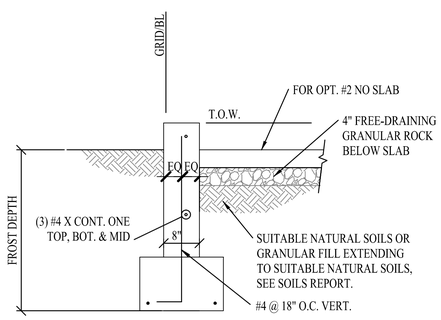

1-B S5.00 **TYPICAL FOUNDATION**
N.T.S.

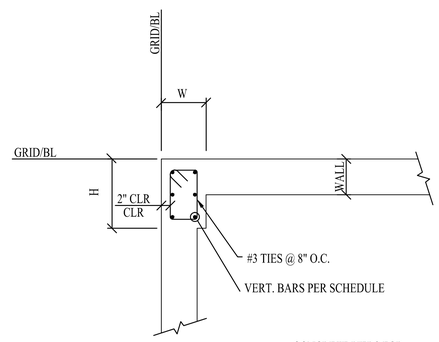

2-B S5.00 **CORNER PIERS**
N.T.S.

CONCRETE PIERS FOR
PRE-MANUFACTURED METAL BUILDING

PIER	H	W	VERTICAL BARS
P-A	1'-2"	1'-0"	(6) #5

3-B S5.00 **NOT USED**
N.T.S.

4-B S5.00 **NOT USED**
N.T.S.

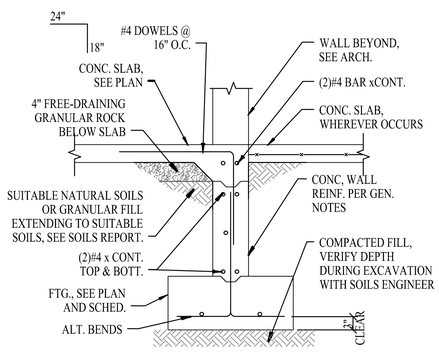

1-A S5.00 **EXT. WALL FTG DET. @ OPENING**
N.T.S.

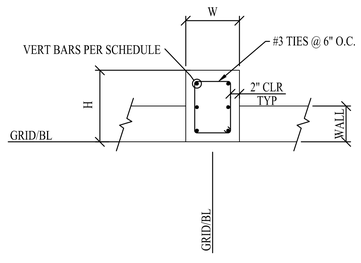

2-A S5.00 **INTERMEDIATE PIER**
N.T.S.

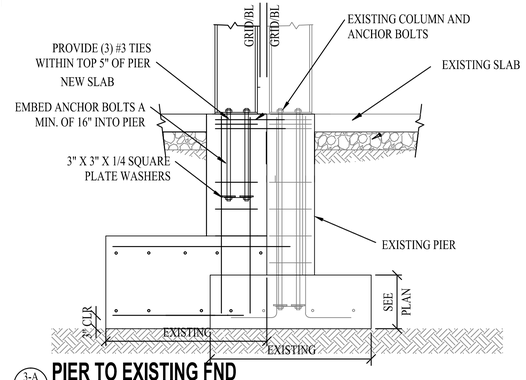

3-A S5.00 **PIER TO EXISTING FND**
N.T.S.

4-A S5.00 **NOT USED**
N.T.S.

McNEIL ENGINEERING™
Economic and Sustainable Designs, Professionals You Know and Trust
8610 South Sandy Parkway, Suite 200 Sandy, Utah 84070 801.255.7700 mcneilengineering.com
Civil Engineering • Consulting & Landscape Architecture
Structural Engineering • Land Surveying & HDS

ELKO PRE-MANUFACTURE

METAL BUILDING ADDITION
3750 IDAHO STREET
ELKO, NEVADA

REVISIONS

REV	DATE	DESCRIPTION

PROJECT NO:	15437
DRAWN BY:	NSC
CHECKED BY:	BJW
DATE:	09/17/15
SHEET:	OF .

STRUCTURAL DETAIL

S5.00

C:\Users\Brian.MCNEIL-GROUP\appdata\local\temp\AcPublish_1372\15437_structl(09-10-15).dwg Brian Sep 17, 2015 - 3:32pm

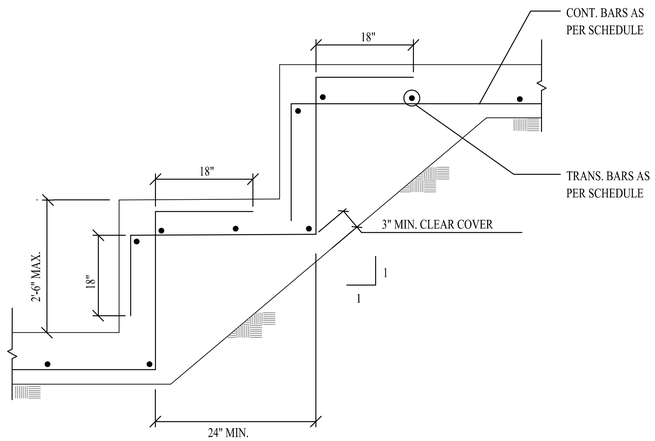

1-C / S0.01 N.T.S.
STEPPED FOOTING

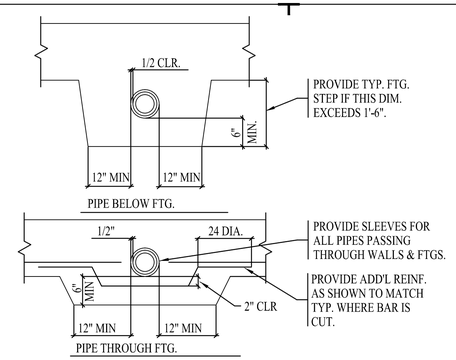

3-D / S0.01 N.T.S.
PIPE PERPENDICULAR TO FTG.

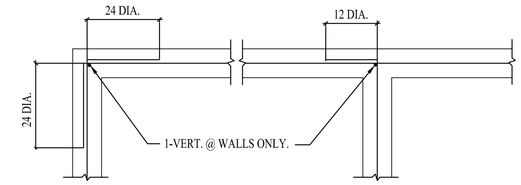

4-D / S0.01 N.T.S.
REINF. @ INTERSECTIONS

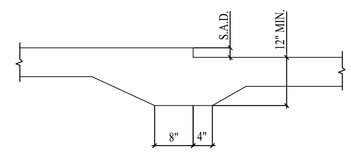

3-C / S0.01 N.T.S.
DEPRESSED SLAB ON GRADE

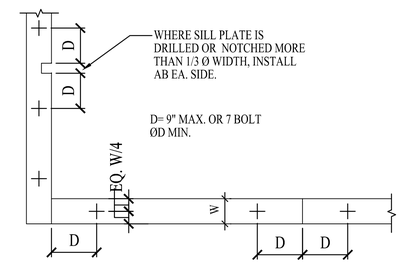

SEE PLANS & DETAILS FOR ANCHOR BOLT
SIZE & SPACING.

4-C / S0.01 N.T.S.
SILL PLATE BOLTING

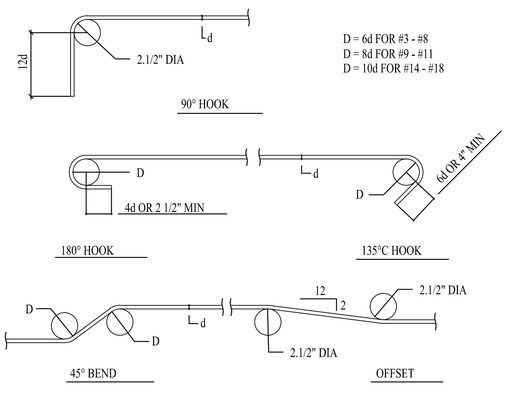

1-A / S0.01 N.T.S.
REINF. BENDS, HOOKS, AND OFFSET

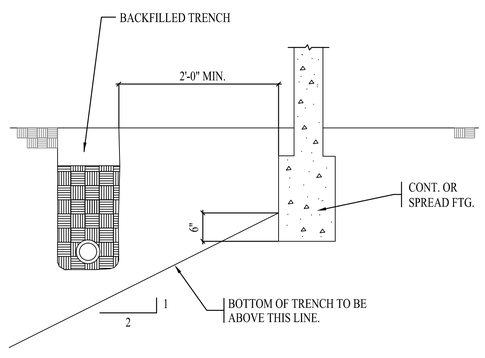

2-B / S0.01 N.T.S.
PIPE PARALLEL TO FTG.

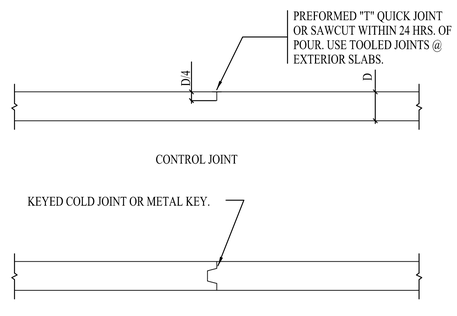

2-A / S0.01 N.T.S.
SLAB ON GRADE JOINT

SPACE CONTROL & OR CONSTRUCTION JOINTS @
16'-0" cc MAX. EACH WAY U.N.O. ON PLANS.

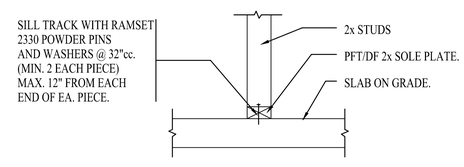

3-B / S0.01 N.T.S.
SLAB ON GRADE NON-BEARING WALL

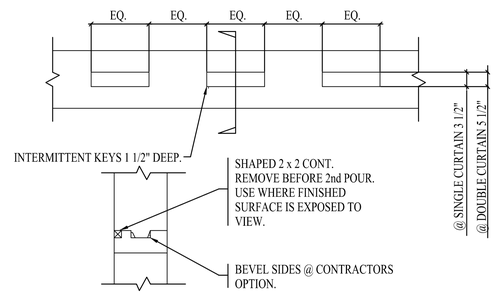

3-A / S0.01 N.T.S.
CONST. JT. IN WALL OR FTG.

APPLIES TO BOTH VERT. AND HORIZ. JOINTS.

4-B / S0.01 N.T.S.
NOT USED

4-A / S0.01 N.T.S.
NOT USED

McNEIL ENGINEERING™
Economic and Sustainable Designs, Professionals You Know and Trust
8610 South Sandy Parkway, Suite 200 Sandy, Utah 84070 801.255.7700 mcneilengineering.com
Civil Engineering • Consulting & Landscape Architecture
Structural Engineering • Land Surveying & HDS

ELKO PRE-MANUFACTURE

METAL BUILDING ADDITION
3750 IDAHO STREET
ELKO, NEVADA

REVISIONS

REV	DATE	DESCRIPTION

PROJECT NO:	15437
DRAWN BY:	NSC
CHECKED BY:	BJW
DATE:	09/17/15
SHEET:	OF .

TYPICAL STRUCTURAL DETAIL

S5.01

C:\Users\Brian.MCNEIL-GROUP\appdata\local\temp\AcPublish_1372\15437_struct(09-10-15).dwg Brian Sep 17, 2015 - 3:32pm

Builder/Contractor Responsibilities

Drawing Validity – These drawings, supporting structural calculations and design certification are based on the order documents as of the date of these drawings. These documents describe the material supplied by the manufacturer as of the date of these drawings. Any changes to the order documents after the date on these drawings may void these drawings, supporting structural calculations and design certification. The Builder/Contractor is responsible for notifying the building authority of all changes to the order documents which result in changes to the drawings, supporting structural calculations and design certification.

Builder Acceptance of Drawings – Approval of the manufacturer's drawings and design data affirms that the manufacturer has correctly interpreted and applied the requirements of the order documents and constitutes Builder/Contractor acceptance of the manufacturer's interpretations of the order documents and standard product specifications, including its design, fabrication and quality criteria standards and tolerances. (AISC code of standard practice Sept 86 Section 4.2.1)(Mar 05 Section 4.4.1)

Code Official Approval – It is the responsibility of the Builder/Contractor to ensure that all project plans and specifications comply with the applicable requirements of any governing building authority. The Builder/Contractor is responsible for securing all required approvals and permits from the appropriate agency as required.

Building Erection – The Builder/Contractor is responsible for all erection of the steel and associated work in compliance with the Metal Building Manufacturers drawings. Temporary supports, such as temporary guys, braces, false work or other elements required for erection will be determined, furnished and installed by the erector (AISC Code of Standard Practice Sept 86 Section 7.9.1) (Mar 05 Section 7.10.3) (CSA/S16–09 Section 29).

Discrepancies – Where discrepancies exist between the Metal Building plans and plans for other trades, the Metal Building plans will govern. (AISC Code of Standard Practice Sept 86 Section 3.3) (Mar 05 Section 3.3)

Materials by Others – All interface and compatibility of any materials not furnished by the manufacturer are the responsibility of and to be coordinated by the Builder/Contractor or A/E firm. Unless specific design criteria concerning any interface between materials if furnished as a part of the order documents, the manufacturers assumptions will govern.

Modification of the Metal Building from Plans – The Metal Building supplied by the manufacturer has been designed according to the Building Code and specifications and the loads shown on this drawing. Modification of the building configuration, such as removing wall panels or braces, from that shown on these plans could affect the structural integrity of the building. The Metal Building Manufacturer or a Licensed Structural Engineer should be consulted prior to making any changes to the building configuration shown on these drawings. The Metal Building Manufacturer will assume no responsibility for any loads applied to the building not indicated on these drawings.

Foundation Design
The Metal Building Manufacturer is not responsible for the design, materials and workmanship of the foundation. Anchor rod plans prepared by the manufacturer are intended to show only location, diameter and projection of the anchor rods required to attach the Metal Building System to the foundation. It is the responsibility of the end customer to ensure that adequate provisions are made for specifying rod embedment, bearing values, tie rods and or other associated items embedded in the concrete foundation, as well as foundation design for the loads imposed by the Metal Building System, other imposed loads, and the bearing capacity of the soil and other conditions of the building site. (MBMA 06 Sections 3.2.2 and A3)

STAR BUILDING SYSTEMS®
AN NCI COMPANY

For questions regarding the interpretation of the drawings, materials provided, or assembly of the parts:
- Call 1–800–879–7827 and ask for the "Field Service" department.
- Before or after normal hours, you may send an email to OKCSField.Service@StarBuildings.net, Please include the order no., brief description of the question, & contact name and phone number.

Drawing Index

Page	Description
E1	Cover Sheet
E2	Roof Framing BLDGB
E3	Sidewall BLDGB WALLSWA
E4	Sidewall BLDGB WALLSWC
E5	Endwall BLDGB WALLEWB
E6–E7	Construction Drawings
E8–E9	Main Frame Cross Sections
E10	Connection Detail

ENGINEERING DESIGN CRITERIA

```
Building Code ......................   2009 IBC
Occupancy Category .................   Normal (Category II)
Roof Dead Load
     Superimposed ..................   2.81 psf
     Collateral ....................   5.00 psf
     (0.00 psf Ceiling 5.00 psf Other)
Roof Live Load ....................   20.00 psf reduction allowed

Snow
     Ground Snow Load (Pg) .........   30.00 psf
     Snow Load Importance Factor (I)   1.00
     Flat Roof Snow Load (Pf) ......   21.00 psf
     Snow Exposure Factor (Ce) .....   1.00
     Thermal Factor (Ct) ...........   1.00

Wind
     Basic Wind Speed ..............   115.00 mph
     Wind Importance Factor (I) ....   1.00
     Wind Exposure Category ........   C
     Internal Pressure Coef (GCpi)     0.18/-0.18
     Loads for components not provided by building manufacturer
     Corner Areas (within 3.00' of corner) 26.38 psf pressure -35.17 psf suction
     Other Areas                           26.38 psf pressure -28.58 psf suction
     These values are the maximum values required based on a 10 sq ft area.
     Components with larger areas may have lower wind loads.

Seismic
     Seismic Importance Factor (Ie)    1.00
     Seismic Design Category ......    D
     Soil Site Class ..............    D Stiff Soil
     Ss ...........................    0.524 g          Sds .....  0.482 g
     S1 ...........................    0.166 g          Sd1 .....  0.236 g
     Analysis Procedure ...........    Equivalent Lateral Force
     Column Line                            1-3          SWC & SWA
     Basic Force Resisting System           C4           B4
     Response Modification Coefficient (R)  3.50         3.25
     Seismic Response Coefficient (Cs)      0.138        0.148
     Design Base Shear in kips (V)          1.71         1.56
     Basic Structural System (from ASCE 7-05 Table 12.2-1)
       B4 - Ordinary Steel Concentrically Braced Frame
       C4 - Ordinary Steel Moment Frame
```

DEFLECTION CRITERIA

The material supplied by the manufacturer has been designed with the following minimum deflection criteria. The actual deflection may be less depending on actual load and actual member length. The frame sidesway for wind loading is based on ASCE 7 commentary equation CC-3 of 0.7W. The limits shown are at service loads unless indicated otherwise.

BUILDING DEFLECTION LIMITS...: BLDG-B

Roof Limits	Rafters	Purlins	Panels
Live L/	180	150	60
Snow L/	180	180	60
Wind L/	180	180	60
Total Gravity L/	120	120	60
Total Uplift L/	N/A	N/A	60

Frame Limits	Sidesway
Live H/	60
Snow H/	60
Wind H/	60
Seismic Drift H/	40
Crane H/	N/A
Total Gravity H/	60
Total Wind H/	60
Service Seismic H/	50

Wall Limits	Limit
Total Wind Panels L/	60
Total Wind Girts L/	90

The Service Seismic limit as shown here is at service level loads.

PROJECT NOTES

Material properties of steel bar, plate, and sheet used in the fabrication of built-up structural framing members conform to ASTM A529, ASTM A572, ASTM A1011 SS, or ASTM A1011 HSLAS with a minimum yield point of 50 ksi. Material properties of hot rolled structural shapes conform to ASTM A992, ASTM A529, or ASTM A572 with a minimum specified yield point of 50 ksi. Hot rolled angles, other than flange braces, conform to ASTM 36 minimum. Hollow structural shapes conform to ASTM A500 grade B, minimum yield point is 42 ksi for round HSS and 46 ksi for rectangular HSS. Material properties of cold-formed light gage steel members conform to the requirements of ASTM A1011 SS Grade 55, ASTM A1011 HSLAS Grade 55 Class 1, ASTM A653 SS Grade 55, or ASTM A653 HSLAS Grade 55 Class 1 with a minimum yield point of 55 ksi. For Canada, material properties conform to CAN/CSA G40.20/G40.21 or equivalent.

Bolted joints with A325 Type 1 bolts greater than 1/2" diameter are specified as pre-tensioned joints in accordance with the Specification for Structural Joints Using ASTM A325 or A490 Bolts, December 31, 2009. Pre-Tensioning can be accomplished by using the turn-of-nut method of tightening, calibrated wrench, twist-off-type tension-control bolts or direct-tension-indicator as acceptable to the Inspecting Agency and Building Official. Installation inspection requirements for pre-tensioned joints (Specification for Structural Joints Section 9.2) using turn-of-nut method is suggested. The connections on this project are not slip critical.

Design criteria as noted is as given within order documents and is applied in general accordance with the applicable provisions of the model code and/or specification indicated. Neither the metal building manufacturer nor the certifying engineer declares or attests that the loads as designated are proper for local provisions that may apply or for site specific parameters. The design criteria is supplied by the builder, project owner, or an Architect and/or Engineer of Record for the overall construction project.

The metal building manufacturer has not designed the structure for snow accumulation loads at the ground level which may impose snow loads on the wall framing provided by the manufacturer.

This metal building system is designed as enclosed. All exterior components (i.e. doors, windows, vents, etc.) must be designed to withstand the specified wind loading for the design of components and cladding in accordance with the specified building code. Doors are to be closed when a maximum of 50% of design wind velocity is reached.

The materials by the manufacturer will be fabricated in a facility that has received certification of accreditation for the Manufacturers of Metal Building Systems (AC472) from International Accreditation Service (IAS). This certification is recognized under Section 1704 of the IBC for approved fabricators.

The framing at building B, gridlines 1, 3 is NOT designed to receive a future bay addition. Corresponding frame reactions are calculated based upon actual tributary area.

Framed openings, walk doors, and open areas shall be located in the bay and elevation as shown in the erection drawings. The cutting or removal of girts shown on the erection drawings due to the addition of framed openings, walk doors, or open areas not shown may void the design certifications supplied by the metal building manufacturer.

Using Northern 7x7 eave gutter with 4 x 5 downspouts, the roof drainage system has been designed using the method outlined in the MBMA Metal Building Systems Manual. Downspout locations have not been located on these drawings. The downspouts are to be placed on the building sidewalls at a spacing not to exceed 120 feet with the first downspout from both ends of the gutter run within 60 feet of the end. Downspout spacing that does not exceed the maximum spacing will be in compliance with the building code. The gutter and downspout system as provided by the manufacturer is designed to accommodate 2.1 in/hr rainfall intensity.

The girts in building B and side A, B, D have been designed with the liner attached to the inner flange of the girts. If the liner is not installed or is removed the girt shall be reviewed for structural adequacy.

The structure provided by the metal building manufacturer will have a lateral drift of 1 inch under seismic load at frame lines 1-3. This seismic drift is the maximum inelastic response displacement. The metal building manufacturer is not responsible for the deflection compatibility between the new structure and construction by others at building B and side C. Determination of any separation between the new structure and construction by others to comply with the provisions of the building code is not by the metal building manufacturer.

1/2"ø A325 BOLT GRIP TABLE

GRIP	LENGTH
0 TO 9/16"	1 1/4" F.T.
Over 9/16" TO 1 1/16"	1 3/4" F.T.
Over 1 1/16" TO 1 5/16"	2"
Over 1 5/16" TO 1 9/16"	2 1/4"
Over 1 9/16" TO 1 13/16"	2 1/2"
Over 1 13/16" TO 2 1/16"	2 3/4"
LOCATIONS OF BOLTS LONGER THAN 2 3/4" NOTED ON ERECTION DRAWINGS	
F.T. DENOTES FULLY THREADED	

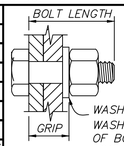

NOTE:
FULL THREAD ENGAGEMENT IS DEEMED TO HAVE BEEN MET WHEN THE END OF THE BOLT IS FLUSH WITH THE FACE OF THE NUT.

WASHER REQUIRED ONLY WHEN SPECIFIED. WASHER MAY BE LOCATED UNDER HEAD OF BOLT, UNDER NUT, OR AT BOTH AT LOCATIONS NOTED ON ERECTION DRAWINGS. ADD 5/32" FOR EACH WASHER TO MATERIAL THICKNESS TO DETERMINE GRIP.

BUILDING DESCRIPTIONS

Building ID	Width	Length	Height	Slope
Building B	19'–0	52'–6	11'–11½	½:12

Revision	Date	Description	By	Ck'd

STAR BUILDING SYSTEMS® AN NCI COMPANY
P.O. BOX 94910
OKLAHOMA CITY, OK 73143
(405) 636-2010

Customer: ENTELEN DESIGN-BUILD LLC
SANDY, UT

Project Name & Location: RIVERTON MOTORS
ELKO, NV

Drawing Status:
☐ Preliminary (Not For Construction)
☐ For Approval (Not For Construction)
☒ For Construction Permit
☐ For Erector Installation

Scale:	NOT TO SCALE
Drawn by:	SDG 9/3/15
Checked by:	FLG 9/25/15
Project Engineer:	RM
Job Number:	14–B–95580
Sheet Number:	E1 of 10

The engineer whose seal appears hereon is an employee for the manufacturer for the materials described herein. Said seal or certification is limited to the products designed and manufactured by manufacturer only. The undersigned engineer is not the overall engineer of record for this project.

DRST1A ENST1B

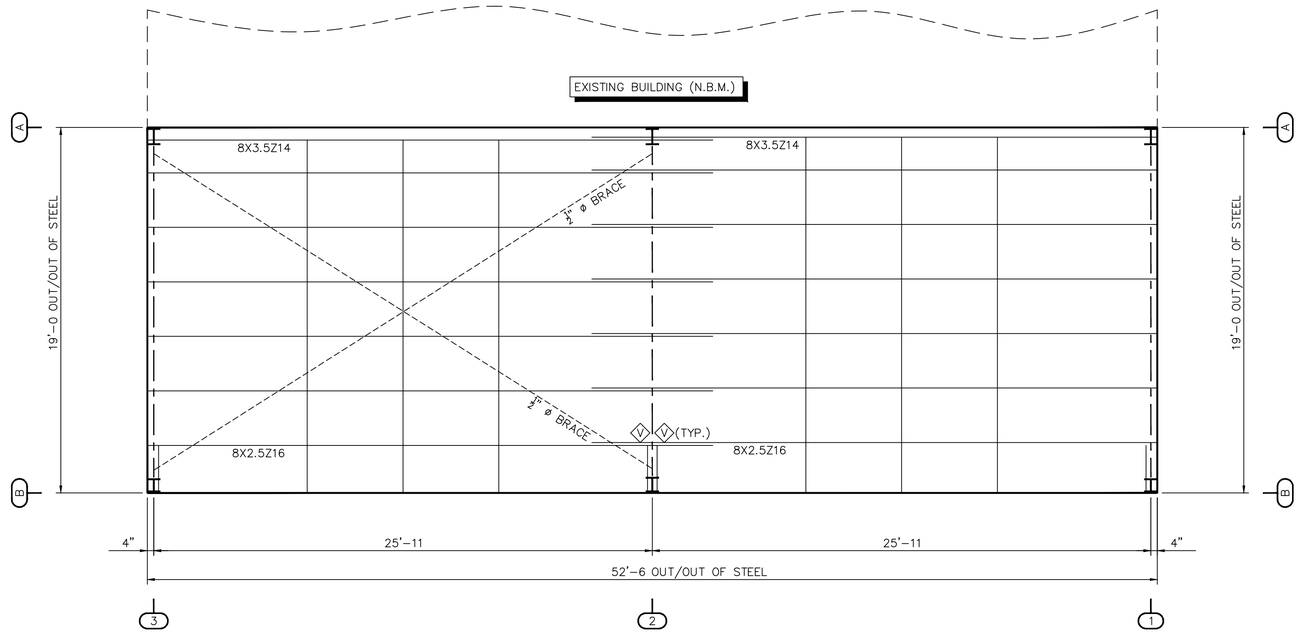

ROOF FRAMING PLAN

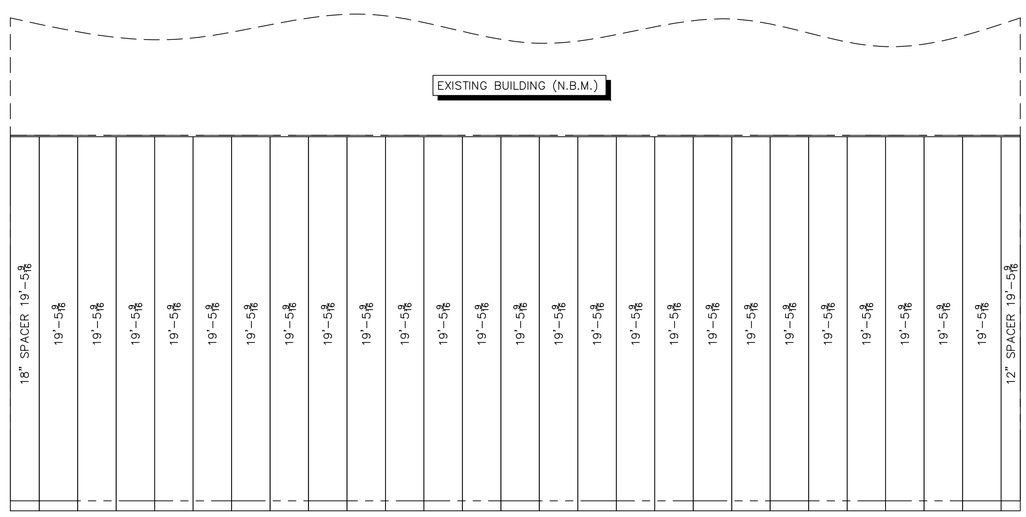

ROOF SHEETING PLANE 1
PANEL TYPE = UDK (POLAR WHITE)
PANEL OVERHANG = 6 1/4
FROM OUTER STEEL

ROOF SHEETING PLAN

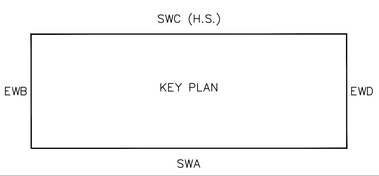

Z_SECTION LAP TABLE			
SYMBOL	LAP (LENGTH)	SYMBOL	LAP (LENGTH)
S	0'-2" (3 3/4")	T	2'-4"(2'-5 3/4")
R	1'-4"(1'-5 3/4")	V	3'-0"(3'-1 3/4")

DOWNSPOUT LAYOUT
[2 REQ'D]

DOWNSPOUTS ARE TO BE PLACED AT A SPACING NOT TO EXCEED 120'-0 WITH A DOWNSPOUT WITHIN 60'-0 OF EACH END OF THE GUTTER RUN.

Revision	Date	Description	By	Ck'd

STAR BUILDING SYSTEMS® AN NCI COMPANY
P.O. BOX 94910
OKLAHOMA CITY, OK 73143
(405) 636-2010

Customer:
ENTELEN DESIGN-BUILD LLC
SANDY, UT

Project Name & Location:
RIVERTON MOTORS
ELKO, NV

Drawing Status:
☐ Preliminary (Not For Construction)
☐ For Approval (Not For Construction)
☒ For Construction Permit
☐ For Erector Installation

Scale: NOT TO SCALE
Drawn by: SDG 9/3/15
Checked by: FLG 9/25/15
Project Engineer: RM
Job Number: 14-B-95580
Sheet Number: E2 of 10

The engineer whose seal appears hereon is an employee for the manufacturer for the materials described herein. Said seal or certification is limited to the products designed and manufactured by manufacturer only. The undersigned engineer is not the overall engineer of record for this project.

DRST1A ENST1B

NOTE: GIRTS AND/OR WALL PANELS MAY REQUIRE FIELD CUTTING AT FRAMED OPENINGS, WALK DOORS, WINDOWS, LOUVERS, OPEN AREAS, AND/OR CONSTRUCTION (NOT BY STAR) AREAS.

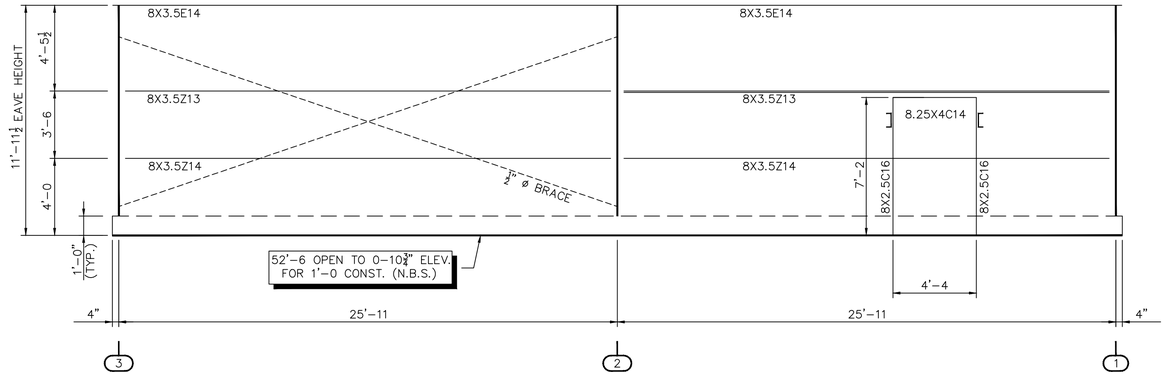

ELEVATION "SWA"

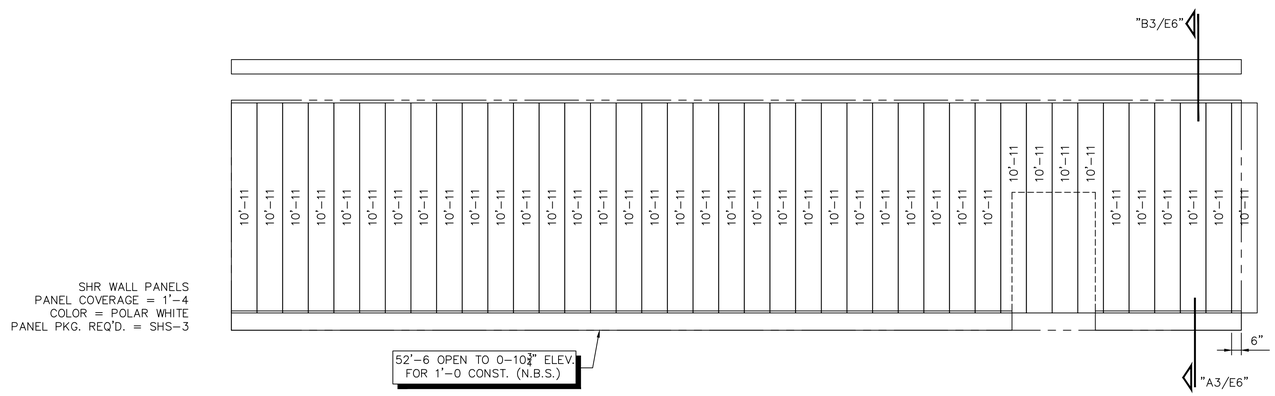

WALL SHEETING ELEVATION "SWA"
BLDG "B"

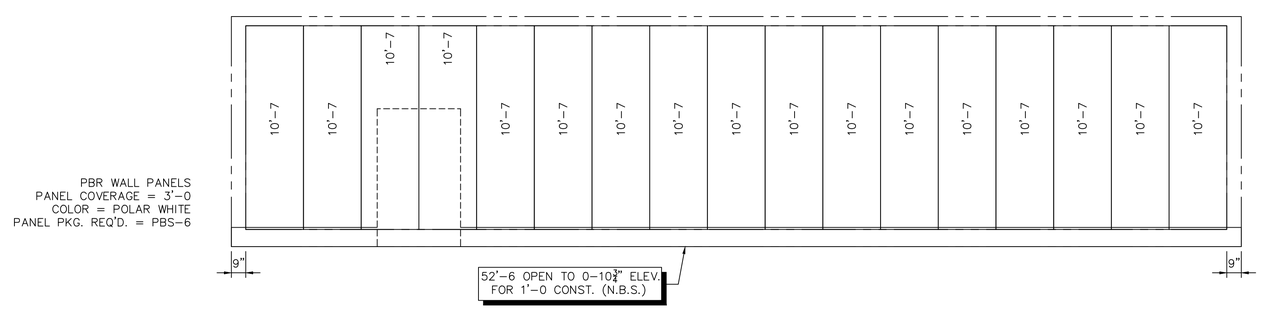

LINER SHEETING ELEVATION "SWA"
VIEWED FROM ELEVATION "SWC"
BLDG "B"

Revision	Date	Description	By	Ck'd

STAR BUILDING SYSTEMS® AN NCI COMPANY
P.O. BOX 94910
OKLAHOMA CITY, OK 73143
(405) 636-2010

Customer: ENTELEN DESIGN-BUILD LLC
SANDY, UT

Project Name & Location:
RIVERTON MOTORS
ELKO, NV

Drawing Status:
☐ Preliminary (Not For Construction)
☐ For Approval (Not For Construction)
☒ For Construction Permit
☐ For Erector Installation

Scale:	NOT TO SCALE
Drawn by:	SDG 9/3/15
Checked by:	FLG 9/25/15
Project Engineer:	RM
Job Number:	14-B-95580
Sheet Number:	E3 of 10

The engineer whose seal appears hereon is an employee for the manufacturer for the materials described herein. Said seal or certification is limited to the products designed and manufactured by manufacturer only. The undersigned engineer is not the overall engineer of record for this project.

DRST1A ENST1B

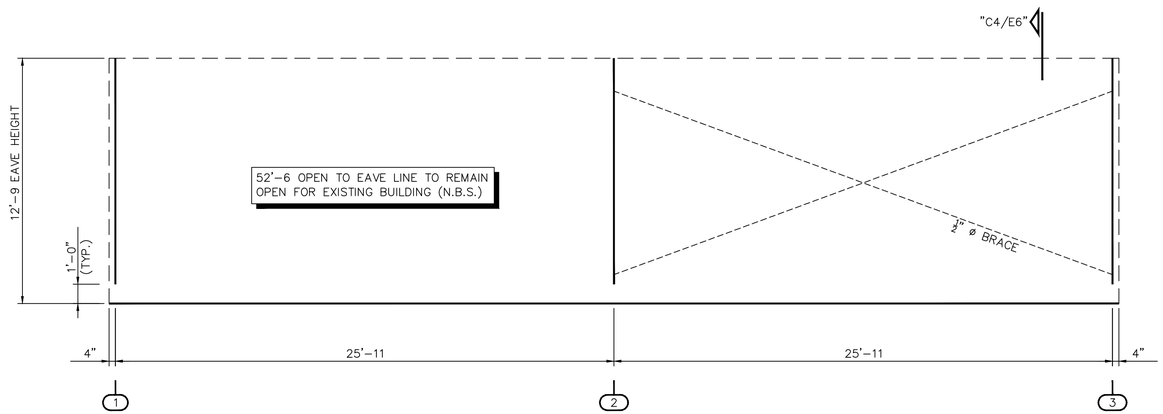

ELEVATION "SWC"

Revision	Date	Description	By	Ck'd

STAR BUILDING SYSTEMS® AN NCI COMPANY
P.O. BOX 94910
OKLAHOMA CITY, OK 73143
(405) 636-2010

Customer:
ENTELEN DESIGN-BUILD LLC
SANDY, UT

Project Name & Location:
RIVERTON MOTORS
ELKO, NV

Drawing Status:
☐ Preliminary (Not For Construction)
☐ For Approval (Not For Construction)
☒ For Construction Permit
☐ For Erector Installation

Scale:	NOT TO SCALE
Drawn by:	SDG 9/3/15
Checked by:	FLG 9/25/15
Project Engineer:	RM
Job Number:	14-B-95580
Sheet Number:	E4 of 10

The engineer whose seal appears hereon is an employee for the manufacturer for the materials described herein. Said seal or certification is limited to the products designed and manufactured by manufacturer only. The undersigned engineer is not the overall engineer of record for this project.

DRST1A ENST1B

NOTE: GIRTS AND/OR WALL PANELS MAY REQUIRE FIELD CUTTING AT FRAMED OPENINGS, WALK DOORS, WINDOWS, LOUVERS, OPEN AREAS, AND/OR CONSTRUCTION (NOT BY STAR) AREAS.

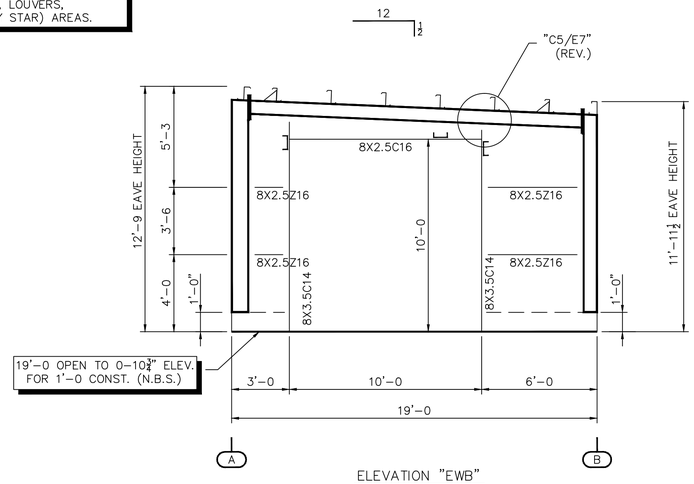

ELEVATION "EWB"

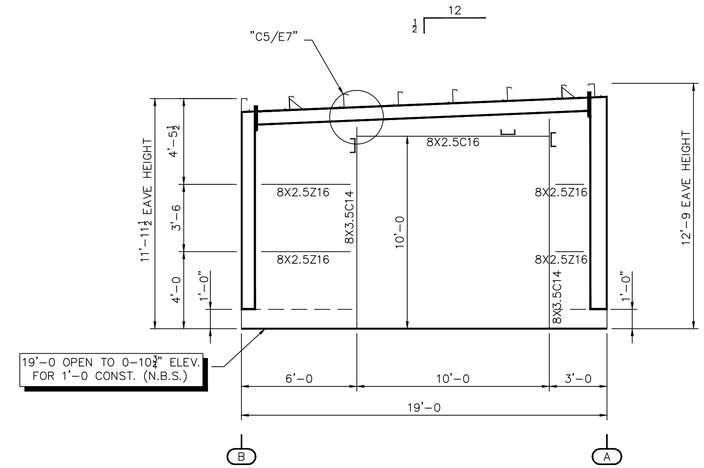

ELEVATION "EWD"

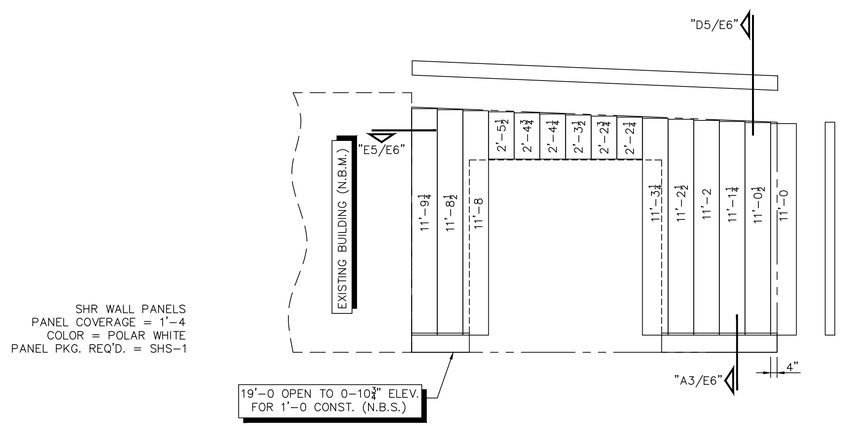

SHR WALL PANELS
PANEL COVERAGE = 1'-4
COLOR = POLAR WHITE
PANEL PKG. REQ'D. = SHS-1

WALL SHEETING ELEVATION "EWB"
BLDG "B"

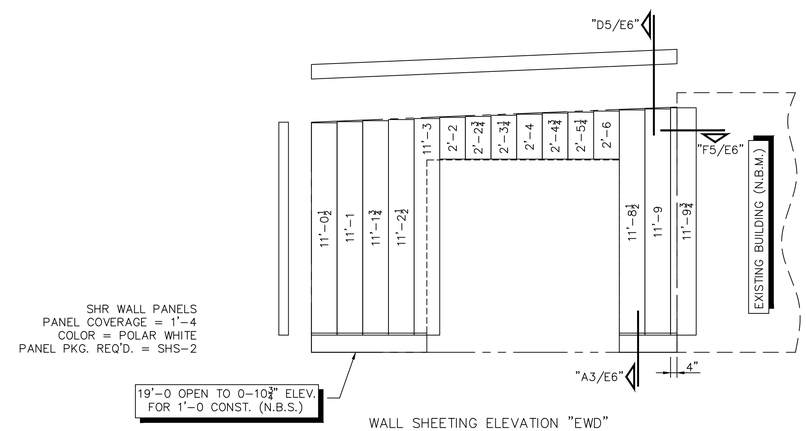

SHR WALL PANELS
PANEL COVERAGE = 1'-4
COLOR = POLAR WHITE
PANEL PKG. REQ'D. = SHS-2

WALL SHEETING ELEVATION "EWD"
BLDG "B"

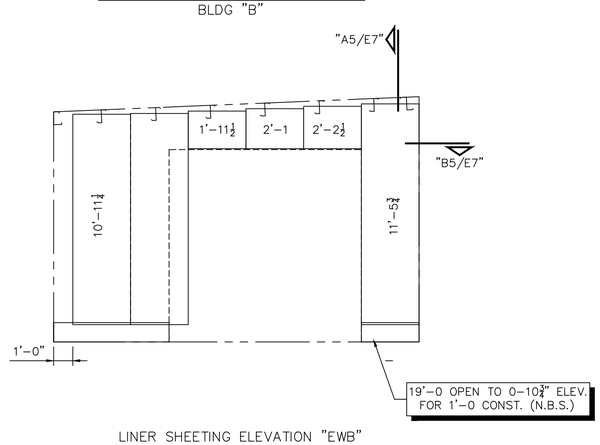

PBR WALL PANELS
PANEL COVERAGE = 3'-0
COLOR = POLAR WHITE
PANEL PKG. REQ'D. = PBS-4

LINER SHEETING ELEVATION "EWB"
VIEWED FROM ELEVATION "EWD"
BLDG "B"

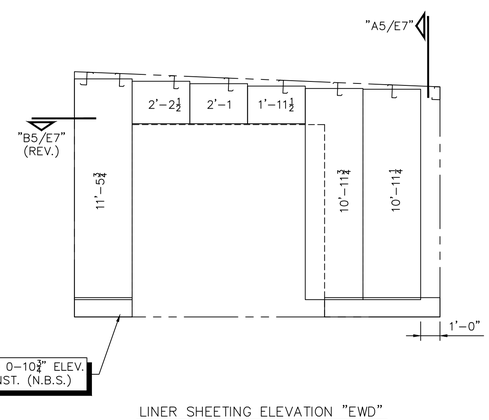

PBR WALL PANELS
PANEL COVERAGE = 3'-0
COLOR = POLAR WHITE
PANEL PKG. REQ'D. = PBS-5

LINER SHEETING ELEVATION "EWD"
VIEWED FROM ELEVATION "EWB"
BLDG "B"

Revision	Date	Description	By	Ck'd

STAR BUILDING SYSTEMS® AN NCI COMPANY
P.O. BOX 94910
OKLAHOMA CITY, OK 73143
(405) 636-2010

Project Name & Location:
RIVERTON MOTORS
ELKO, NV

Customer:
ENTELEN DESIGN-BUILD LLC
SANDY, UT

Drawing Status:
☐ Preliminary (Not For Construction)
☐ For Approval (Not For Construction)
☒ For Construction Permit
☐ For Erector Installation

Scale:	NOT TO SCALE
Drawn by:	SDG 9/3/15
Checked by:	FLG 9/25/15
Project Engineer:	RM
Job Number:	14-B-95580
Sheet Number:	E5 of 10

The engineer whose seal appears hereon is an employee for the manufacturer for the materials described herein. Said seal or certification is limited to the products designed and manufactured by manufacturer only. The undersigned engineer is not the overall engineer of record for this project.

DRST1A ENST1B

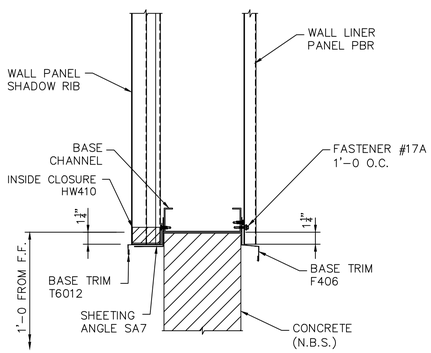

SECTION "A3/E6"

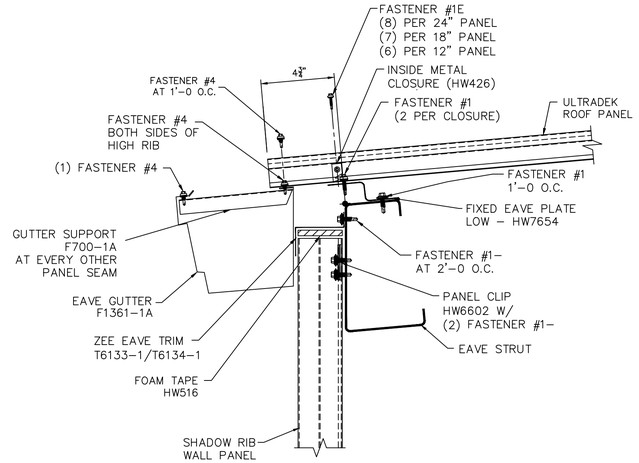

SECTION "B3/E6"

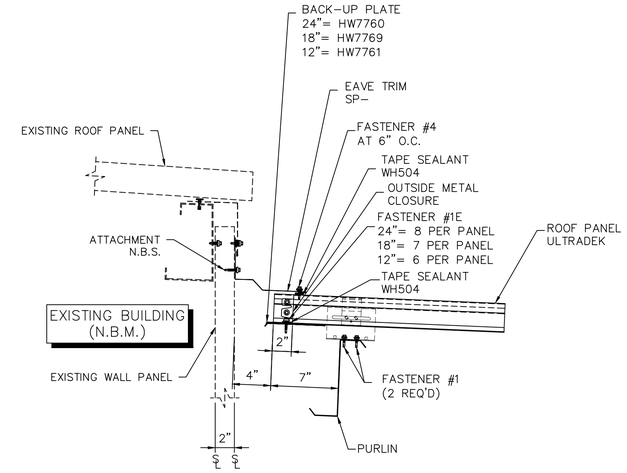

SECTION "C4/E6"

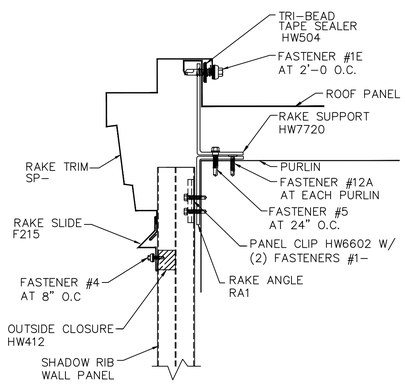

SECTION "D5/E6"

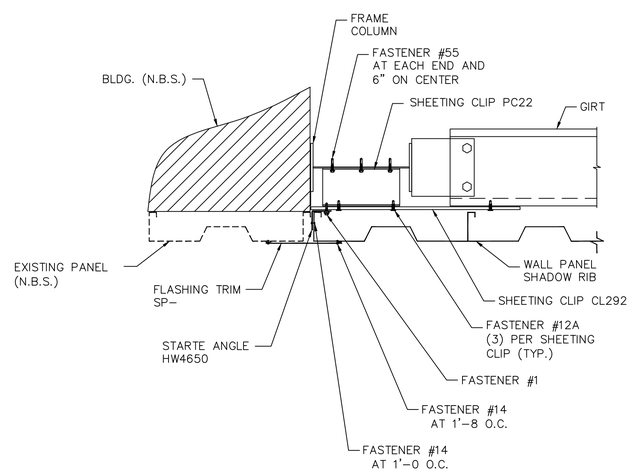

SECTION "E5/E6"

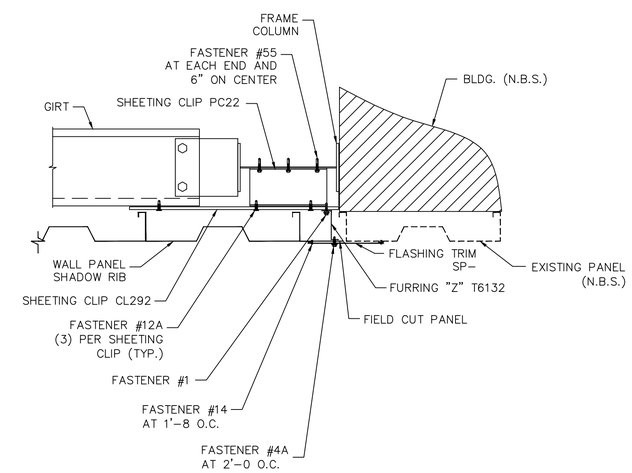

SECTION "F5/E6"

Revision	Date	Description	By	Ck'd

STAR BUILDING SYSTEMS® AN NCI COMPANY
P.O. BOX 94910
OKLAHOMA CITY, OK 73143
(405) 636-2010

Customer: ENTELEN DESIGN-BUILD LLC
SANDY, UT

Project Name & Location: RIVERTON MOTORS
ELKO, NV

Drawing Status:
☐ Preliminary (Not For Construction)
☐ For Approval (Not For Construction)
☒ For Construction Permit
☐ For Erector Installation

Scale:	NOT TO SCALE	
Drawn by:	SDG	9/3/15
Checked by:	FLG	9/25/15
Project Engineer:	RM	
Job Number:	14-B-95580	
Sheet Number:	E6 of 10	

The engineer whose seal appears hereon is an employee for the manufacturer for the materials described herein. Said seal or certification is limited to the products designed and manufactured by manufacturer only. The undersigned engineer is not the overall engineer of record for this project.

DRST1A ENST1B

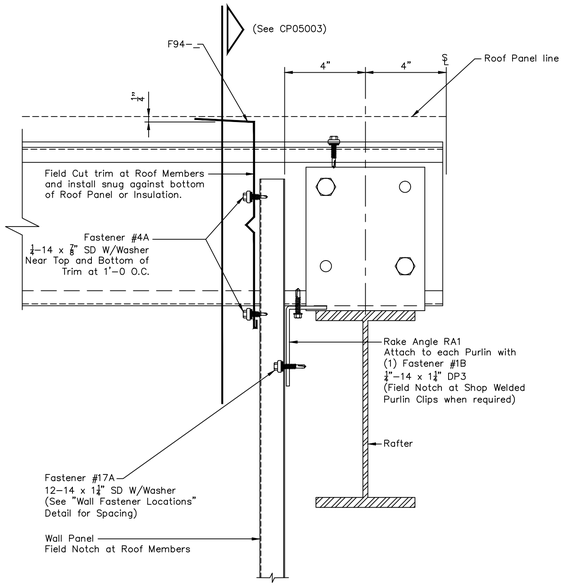

SECTION "A5/E7"

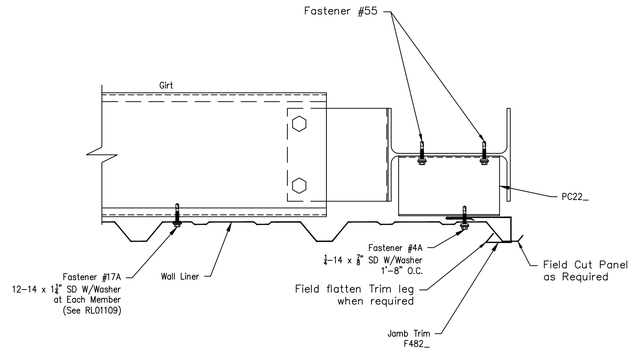

SECTION "B5/E7"

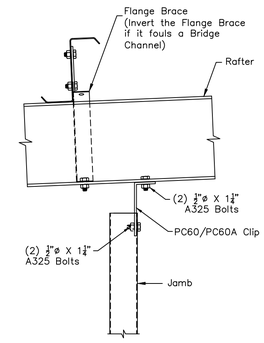

DETAIL "C5/E7"

Revision	Date	Description	By	Ck'd

STAR BUILDING SYSTEMS® AN NCI COMPANY
P.O. BOX 94910
OKLAHOMA CITY, OK 73143
(405) 636-2010

Customer:
ENTELEN DESIGN-BUILD LLC
SANDY, UT

Project Name & Location:
RIVERTON MOTORS
ELKO, NV

Drawing Status:
☐ Preliminary (Not For Construction)
☐ For Approval (Not For Construction)
☒ For Construction Permit
☐ For Erector Installation

Scale: NOT TO SCALE
Drawn by: SDG 9/3/15
Checked by: FLG 9/25/15
Project Engineer: RM
Job Number: 14-B-95580
Sheet Number: E7 of 10

The engineer whose seal appears hereon is an employee for the manufacturer for the materials described herein. Said seal or certification is limited to the products designed and manufactured by manufacturer only. The undersigned engineer is not the overall engineer of record for this project.

DRST1A ENST1B

GENERAL NOTES
FRAME CLEARANCES SHOWN ARE APPROXIMATE AND MAY VARY DUE TO CONDITIONS (DEFLECTION).

VERTICAL CLEARANCE DIMENSIONS ARE FROM FINISHED FLOOR REFERENCE ELEVATION.

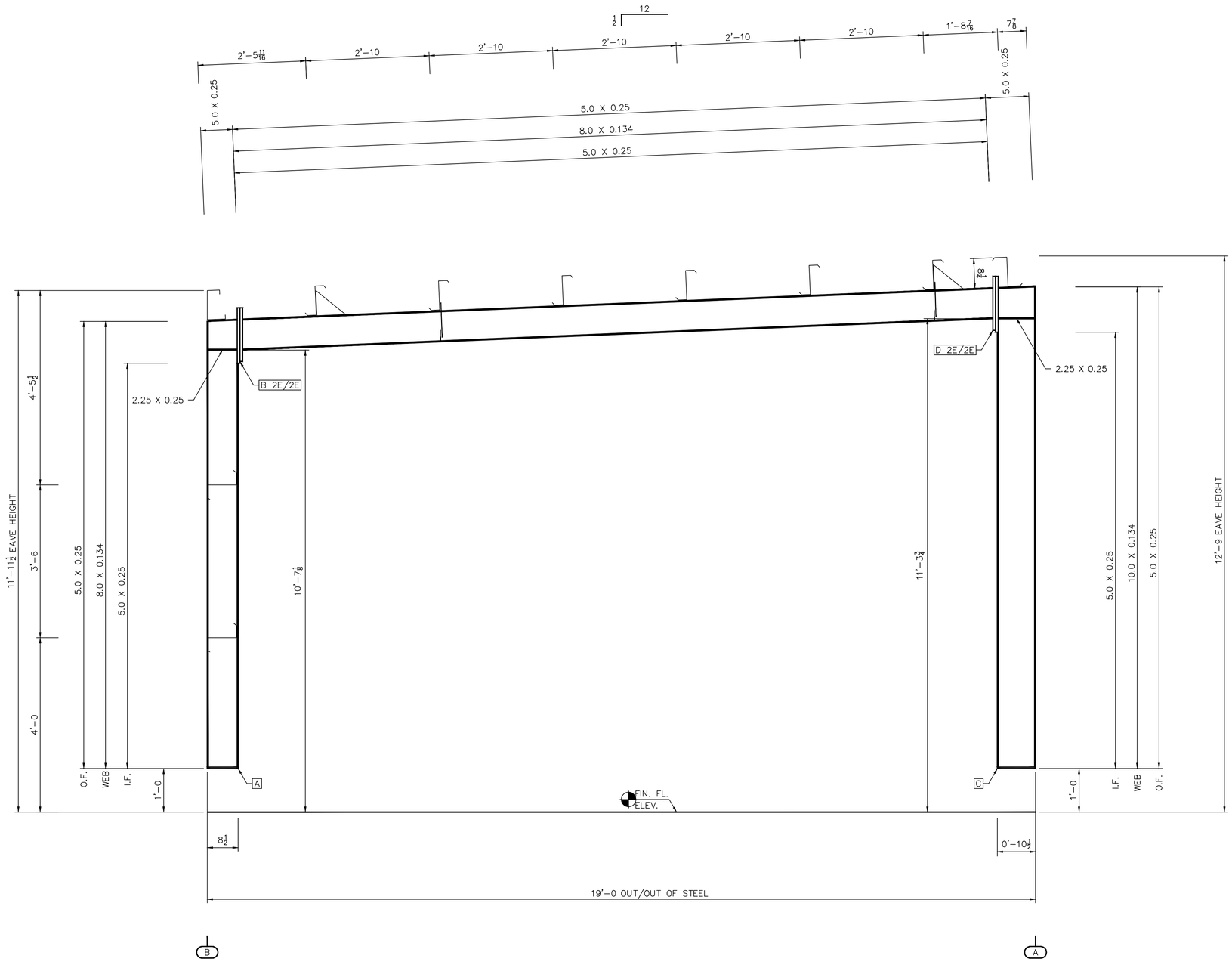

CROSS SECTION AT FRAME LINES "1 & 3"

	PLATE SIZE TABLE		SPLICE BOLT TABLE			
CONN.	LOW SIDE	HIGH SIDE	QTY. SIZE	TYPE	HARDENED WASHERS	BEVELED WASHERS
A	6 X 0.375 X 8 1/2					
B	8 X 0.75 X 1'-3 1/4	8 X 0.75 X 1'-2 3/4	(8) 3/4 X 2 1/2	A325 B&N	0	0
C	6 X 0.375 X 0'-10 1/2					
D	8 X 0.75 X 1'-2 7/8	8 X 0.75 X 1'-3 3/8	(8) 3/4 X 2 1/2	A325 B&N	0	0

Revision	Date	Description	By	Ck'd

STAR BUILDING SYSTEMS® AN NCI COMPANY
P.O. BOX 94910
OKLAHOMA CITY, OK 73143
(405) 636-2010

Project Name & Location:
RIVERTON MOTORS
ELKO, NV

Customer:
ENTELEN DESIGN-BUILD LLC
SANDY, UT

Drawing Status:
☐ Preliminary (Not For Construction)
☐ For Approval (Not For Construction)
☒ For Construction Permit
☐ For Erector Installation

Scale: NOT TO SCALE
Drawn by: SDG 9/3/15
Checked by: FLG 9/25/15
Project Engineer: RM
Job Number: 14-B-95580
Sheet Number: E8 of 10

The engineer whose seal appears hereon is an employee for the manufacturer for the materials described herein. Said seal or certification is limited to the products designed and manufactured by manufacturer only. The undersigned engineer is not the overall engineer of record for this project.

DRST1A ENST1B

GENERAL NOTES
FRAME CLEARANCES SHOWN ARE APPROXIMATE AND MAY VARY DUE TO CONDITIONS (DEFLECTION).

VERTICAL CLEARANCE DIMENSIONS ARE FROM FINISHED FLOOR REFERENCE ELEVATION.

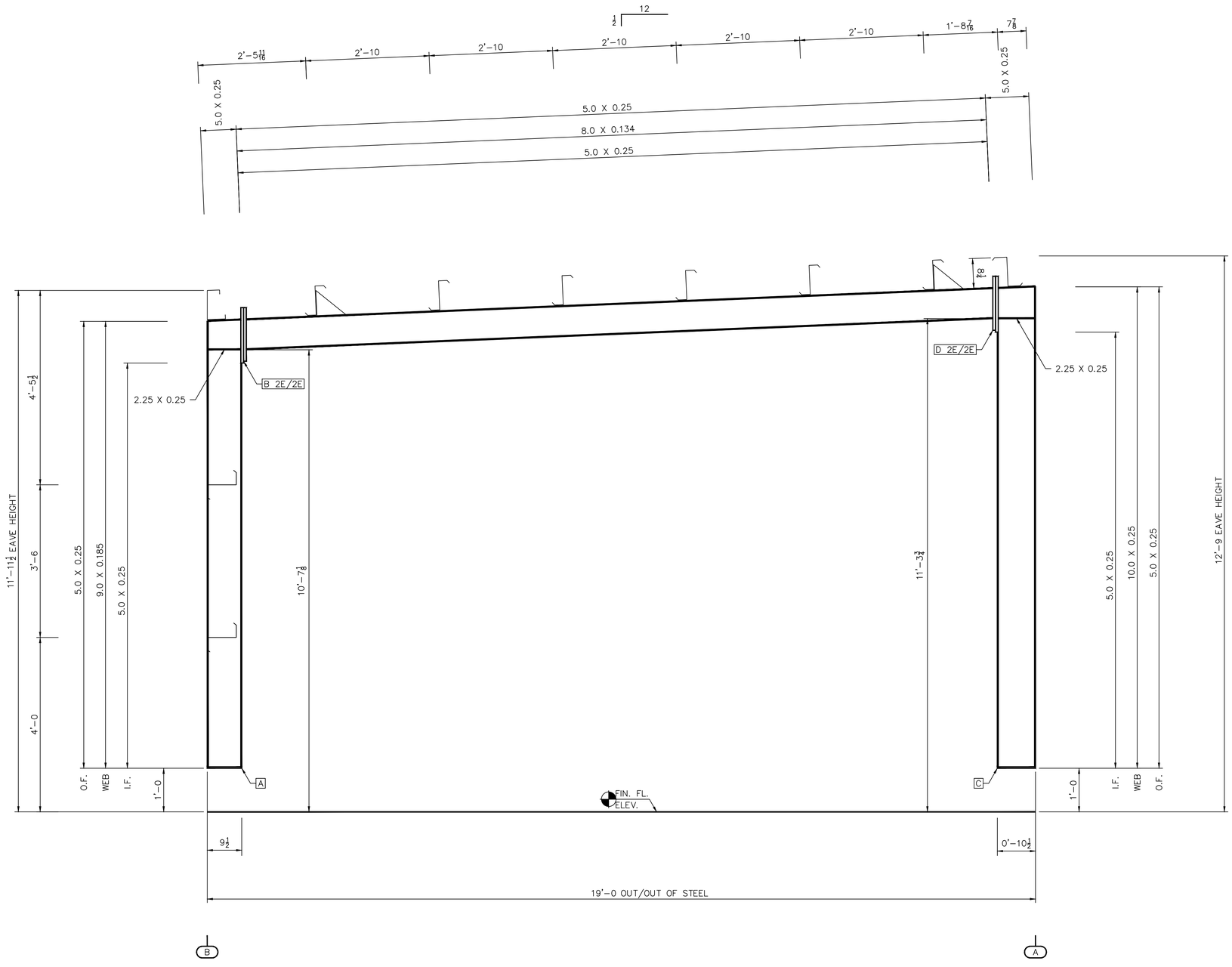

CROSS SECTION AT FRAME LINE "2"

	PLATE SIZE TABLE		SPLICE BOLT TABLE			
CONN.	LOW SIDE	HIGH SIDE	QTY. SIZE	TYPE	HARDENED WASHERS	BEVELED WASHERS
A	6 X 0.375 X 9 1/2					
B	8 X 0.75 X 1'-3 1/4	8 X 0.75 X 1'-2 3/4	(8) 3/4 X 2 1/2	A325 B&N	0	0
C	6 X 0.375 X 0'-10 1/2					
D	8 X 0.75 X 1'-2 7/8	8 X 0.75 X 1'-3 3/8	(8) 3/4 X 2 1/2	A325 B&N	0	0

Revision	Date	Description	By	Ck'd

STAR BUILDING SYSTEMS® AN NCI COMPANY
P.O. BOX 94910
OKLAHOMA CITY, OK 73143
(405) 636-2010

Project Name & Location:
RIVERTON MOTORS
ELKO, NV

Customer:
ENTELEN DESIGN-BUILD LLC
SANDY, UT

Drawing Status:
☐ Preliminary (Not For Construction)
☐ For Approval (Not For Construction)
☒ For Construction Permit
☐ For Erector Installation

Scale: NOT TO SCALE
Drawn by: SDG 9/3/15
Checked by: FLG 9/25/15
Project Engineer: RM
Job Number: 14-B-95580
Sheet Number: E9 of 10

The engineer whose seal appears hereon is an employee for the manufacturer for the materials described herein. Said seal or certification is limited to the products designed and manufactured by manufacturer only. The undersigned engineer is not the overall engineer of record for this project.

DRST1A ENST1B

Frame Documentation
A325 Connection Bolt Details

Page 05-12-10
Date Sep '14 Rev 03

CONNECTION CODES
(FOR TOP AND BOTTOM BOLT PATTERN)

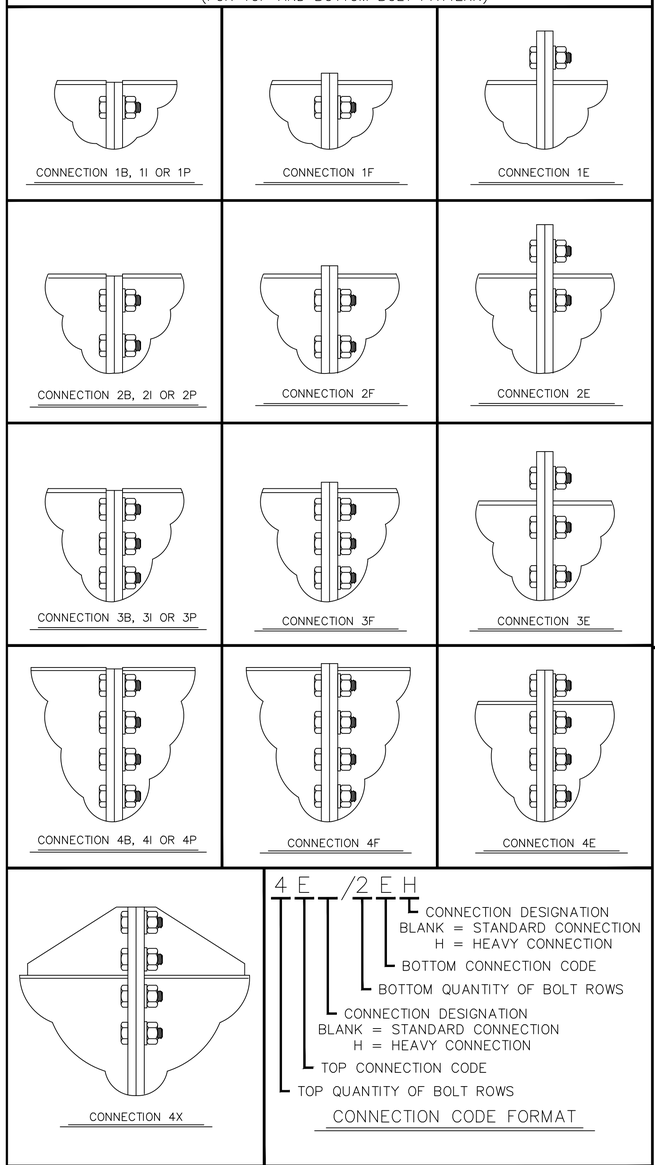

CONNECTION CODE FORMAT

CONNECTION BOLT DATA

NAME	DESCRIPTION FOR A325 BOLT DIMENSIONS	A325 CONNECTION BOLT DIMENSIONS					
D	DIAMETER OF THE BOLT	1/2"	3/4"	7/8"	1"	1 1/4"	1 1/2"
HD	BOLT HOLE DIAMETER	9/16"	13/16"	15/16"	1 1/16"	1 5/16"	1 9/16"
G	BOLT GAUGE	2 1/2"	3"	4"	3 1/2"	4"	5 1/2"
	MAX. WEB THICKNESS (Max. $\frac{5}{16}$" Fillet Weld) WITHOUT WASHER	1"	1 1/8"	1 7/8"	1 1/4"	1 3/8"	2 1/8"
	MAX. WEB THICKNESS (Max. $\frac{5}{16}$" Fillet Weld) WITH WASHER	3/4"	7/8"	1 5/8"	7/8"	7/8"	1 7/8"
HG	HEAVY CONN. BOLT GAUGE	N/A	2 1/4"	2 5/8"	3"	3 3/4"	4"
S	NORMAL BOLT SPACING	2 1/2"	3"	3 1/4"	3 1/2"	4"	4 1/2"
BSMIN	MINIMUM SPACING BETWEEN TOP & BOTTOM SETS OF BOLTS	1 1/2"	2 1/4"	2 5/8"	3"	3 3/4"	4"
BSMAX	MAXIMUM BOLT SPACING BETWEEN TOP AND BOTTOM SETS OF BOLTS ON CONNECTION PLATES LESS THAN OR EQUAL TO 3/4" THICK	2'-0"	2'-0"	2'-0"	2'-0"	2'-0"	2'-0"
		SPLICE BOLT SPACING (NOT TO EXCEED 2'-0") 1/2 BSMAX (±$\frac{1}{16}$") WHEN BSMAX = 2'-0$\frac{1}{16}$" TO 4'-0; 1/3 BSMAX (±$\frac{1}{16}$") WHEN BSMAX = 4'-0$\frac{1}{16}$" TO 6'-0; 1/4 BSMAX (±$\frac{1}{16}$") WHEN BSMAX = 6'-0$\frac{1}{16}$" TO 8'-0					
BFCD	MINIMUM BOLT-TO-FLANGE CLEARANCE AT OUT OF NUT SEE BOLT AT FLANGE DETAIL	1 1/2"	1 3/4"	1 7/8"	2 1/4"	2 1/2"	2 3/4"
PF	MINIMUM BOLT-TO-FLANGE CLEARANCE AT CONNECTION PLATE SEE BOLT AT FLANGE DETAIL	(BFCD + RNWT) PF INSIDE OF FLANGE IS INCREASED BASED ON THE YT & YB VALUE. PF FOR CONNECTION B, F, I AND P ARE THE SAME AS USED ON CONNECTION E					
NWT	NUT AND WASHER THICKNESS	SEE BOLT AT FLANGE DETAIL. NUT THICKNESS IS EQUAL TO THE BOLT DIAMETER AND .15625" WASHER THICKNESS IS USED EVEN IF A WASHER IS NOT REQUIRED.					
RNWT	RISE ON NUT AND WASHER THICKNESS						
TT	THICKNESS TOP FLANGE	REFER TO FRAME CROSS SECTION DRAWING FOR LARGEST FLANGE THICKNESS EITHER SIDE OF THE CONNECTION.					
TB	THICKNESS BOTTOM FLANGE						
YT	BOLT SPACING TOP (ROUND UP TO NEXT 1/2", MIN = S)	3" + TT	3 1/2" + TT	3 3/4" + TT	4 1/2" + TT	5" + TT	5 1/2" + TT
YB	BOLT SPACING BOTTOM (ROUND UP TO NEXT 1/2", MIN = S)	or TB Sloped	or TB Sloped	or TB Sloped	or TB Sloped	or TB Sloped	or TB Sloped
EED(S)	MINIMUM SHEARED END EDGE DIMENSION	1 1/4"	1 1/4"	1 1/2"	1 3/4"	2 1/4"	2 5/8"
EED(R)	MINIMUM ROLLED END EDGE DIMENSION	3/4"	1"	1 1/8"	1 1/4"	1 5/8"	2 1/4"
EEDK	END EDGE DIMENSION AT KNEE CONNECTION	1 3/8"	1 3/8"	1 5/8"	1 7/8"	2 3/8"	2 3/4"
BCWM	MINIMUM BOLT CLEARANCE FROM A FLANGE OR WEB WELD — WITHOUT WASHER	7/16"	5/8"	3/4"	13/16"	1"	1 3/8"
	MINIMUM BOLT CLEARANCE FROM A FLANGE OR WEB WELD — WITH HARDENED WASHER	9/16"	3/4"	7/8"	1"	1 1/4"	1 1/2"
WCSM	MINIMUM WIDTH OF CONNECTION PLATE (Standard Connection)	5"	6"	8"	8"	10"	12"
WCHM	MINIMUM WIDTH OF CONNECTION PLATE (Heavy Connection)	N/A	10"	12"	12"	16"	18"
TCMIN	MINIMUM THICKNESS OF CONNECTION PLATE	1/4"	3/8"	7/16"	1/2"	5/8"	1"

B 4E/2EH
- Connection Code (See "Connection Code Format" on this drawing)
- Connection Location

CROSS SECTION CONNECTION CODE KEY
(AS SHOWN AT CONNECTIONS ON FRAME CROSS SECTION DRAWINGS)

Flange Brace Material Schedule	
Part Mark	Material
FB4_	L 2" x 2" x 14 Ga.
FB5_	L 2" x 2" x 14 Ga.
FB6_	L 2" x 2" x $\frac{1}{8}$"
FB7_	L $2\frac{1}{2}$" x $2\frac{1}{2}$" x $\frac{3}{16}$"

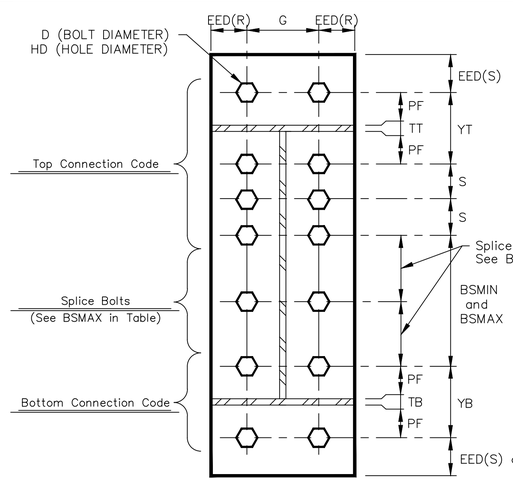

STANDARD CONNECTION DESIGNATION
(CODE 4E/2E SHOWN)

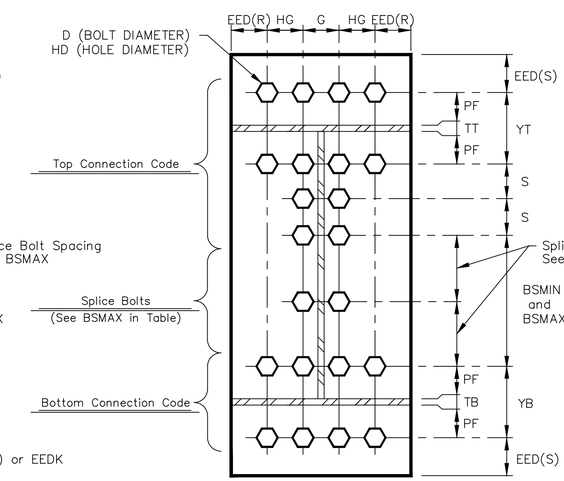

HEAVY CONNECTION DESIGNATION
(CODE 4EH/2EH SHOWN)

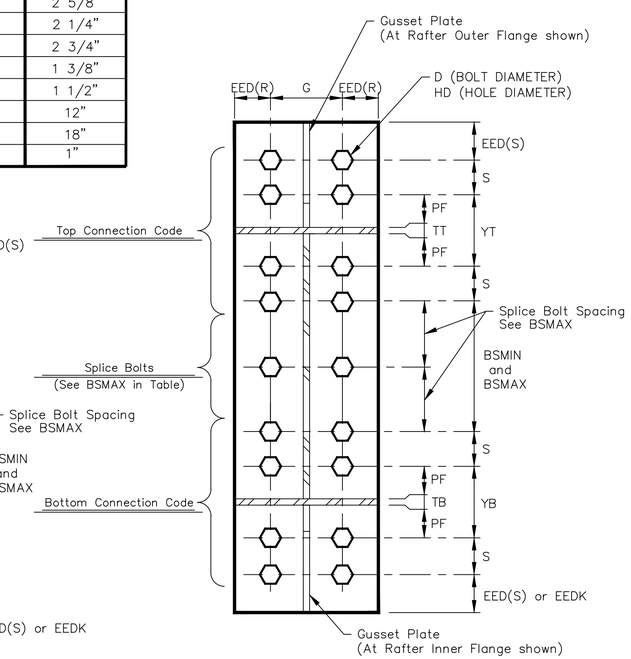

4X CONNECTION DESIGNATION
(CODE 4X/4X SHOWN)

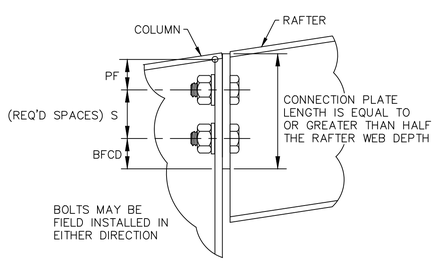

CONNECTION B & P
(Low Side Shown, High Side Similar)

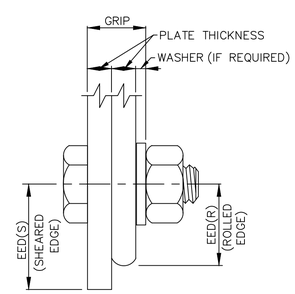

BOLT EDGE DISTANCE

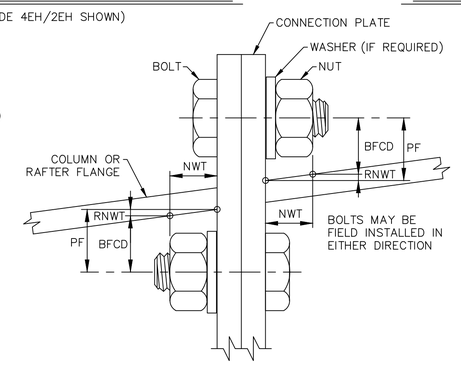

BOLT AT FLANGE DETAIL
(Top Flange Shown, Bottom Flange Similar)

CONNECTION CODE DESCRIPTION

B = THIS DESCRIPTION CODE IS USED TO DEFINE SHEAR CONNECTIONS. BOLTS ARE LOCATED INSIDE THE TOP FLANGE AND CONNECTION PLATE IS RECESSED 1/8" BELOW THE TOP FLANGE. CONNECTION PLATE LENGTH MUST BE A MINIMUM OF HALF THE RAFTER WEB DEPTH AND SHALL NOT EXCEED THE RAFTER TOTAL DEPTH.

E = THIS DESCRIPTION CODE IS USED TO DEFINE MOMENT CONNECTIONS. BOLTS ARE LOCATED WITH ONE SET OUTSIDE THE TOP OR BOTTOM FLANGE AND THE REMAINING SETS ARE LOCATED INSIDE THE TOP OR BOTTOM FLANGE.

F = THIS DESCRIPTION CODE IS USED TO DEFINE MOMENT CONNECTIONS. BOLTS ARE LOCATED INSIDE THE TOP OR BOTTOM FLANGE AND CONNECTION PLATE PROJECTS 1/2" BEYOND THE TOP OR BOTTOM FLANGE.

I = THIS DESCRIPTION CODE IS USED TO DEFINE MOMENT CONNECTIONS. BOLTS ARE LOCATED INSIDE THE TOP OR BOTTOM FLANGE AND CONNECTION PLATE IS RECESSED 1/8" BELOW THE TOP OR BOTTOM FLANGE.

P = THIS DESCRIPTION CODE IS USED TO DEFINE SHEAR CONNECTIONS. BOLTS ARE LOCATED INSIDE THE TOP FLANGE AND CONNECTION PLATE IS RECESSED 1/8" BELOW THE TOP FLANGE. CONNECTION PLATE LENGTH MUST BE A MINIMUM OF HALF THE RAFTER WEB DEPTH AND SHALL NOT EXCEED THE RAFTER TOTAL DEPTH.

4X = THIS DESCRIPTION CODE IS USED TO DEFINE MOMENT CONNECTIONS. BOLTS ARE LOCATED WITH TWO SETS EACH SIDE OF THE TOP OR BOTTOM FLANGE WITH A GUSSET PLATE OUTSIDE THE TOP AND BOTTOM FLANGE OR COLUMN CAP PLATE.

Revision	Date	Description	By	Ck'd

STAR BUILDING SYSTEMS® AN NCI COMPANY
P.O. BOX 94910
OKLAHOMA CITY, OK 73143
(405) 636-2010

Customer: ENTELEN DESIGN-BUILD LLC
SANDY, UT

Project Name & Location: RIVERTON MOTORS
ELKO, NV

Drawing Status:
- ☐ Preliminary (Not For Construction)
- ☐ For Approval (Not For Construction)
- ☒ For Construction Permit
- ☐ For Erector Installation

Scale:	NOT TO SCALE
Drawn by:	SDG 9/3/15
Checked by:	FLG 9/25/15
Project Engineer:	RM
Job Number:	14-B-95580
Sheet Number:	E10 of 10

The engineer whose seal appears hereon is an employee for the manufacturer for the materials described herein. Said seal or certification is limited to the products designed and manufactured by manufacturer only. The undersigned engineer is not the overall engineer of record for this project.

DRSTIA ENSTIB

Anchor Rod Drawings

1) This drawing is for anchor rod placement only and is not foundation design.
2) Foundation must be square and level with all anchor rods true in size, location, and projection.
3) Projection shown must be held to keep threads clear of finished concrete.
4) This structural design data includes magnitude and location of design loads and support conditions, material properties, and type and size of major structural members necessary to show compliance with the Order Documents at the time of this issue. Any change to building loads or dimensions may change structural member sizes and locations shown. This structural design data will be superseded and voided by any future mailing.
5) Anchor rod size is determined by shear and tension at the bottom of the base plate. The length of the anchor rod and method of load transfer to the foundation are to be determined by the foundation engineer, and are not provided by the manufacturer.
6) Anchor rods are ASTM F1554 Gr. 36 material unless noted otherwise.

FINISH FLOOR AT ELEVATION 100'–0

AISC CODE OF STANDARD PRACTICE TOLERANCES FOR SETTING ANCHOR RODS

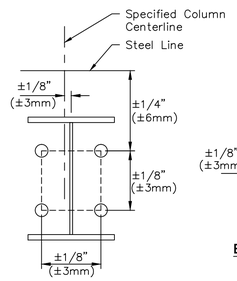

ANCHOR ROD SETTING TOLERANCES

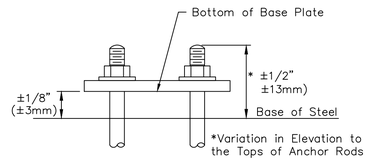

BASE PLATE AND ANCHOR ROD TOLERANCES

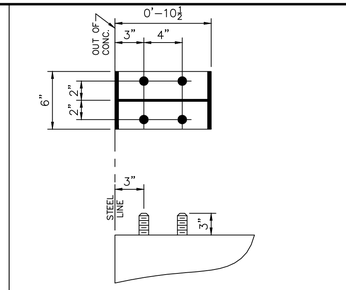

TYPICAL SECTION
4¾"ø ANCHOR RODS
(A)
BASE OF STEEL AT ELEV. 101'–0

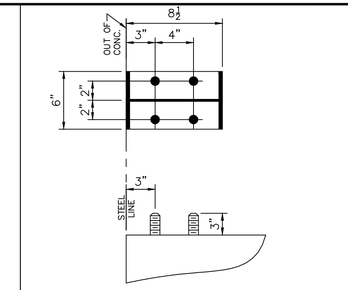

TYPICAL SECTION
4¾"ø ANCHOR RODS
(B)
BASE OF STEEL AT ELEV. 101'–0

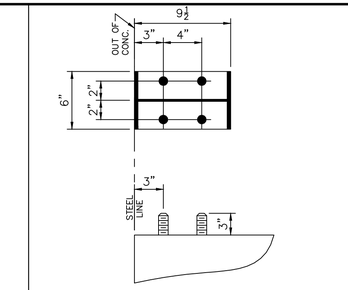

TYPICAL SECTION
4¾"ø ANCHOR RODS
(C)
BASE OF STEEL AT ELEV. 101'–0

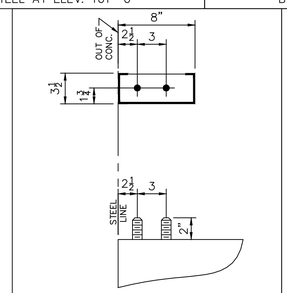

TYPICAL SECTION
⅝"ø ANCHOR RODS
(D)
BASE OF STEEL AT ELEV. 100'–0

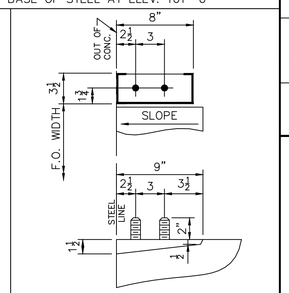

TYPICAL SECTION
⅝"ø ANCHOR RODS
(E)
BASE OF STEEL AT ELEV. 100'–0

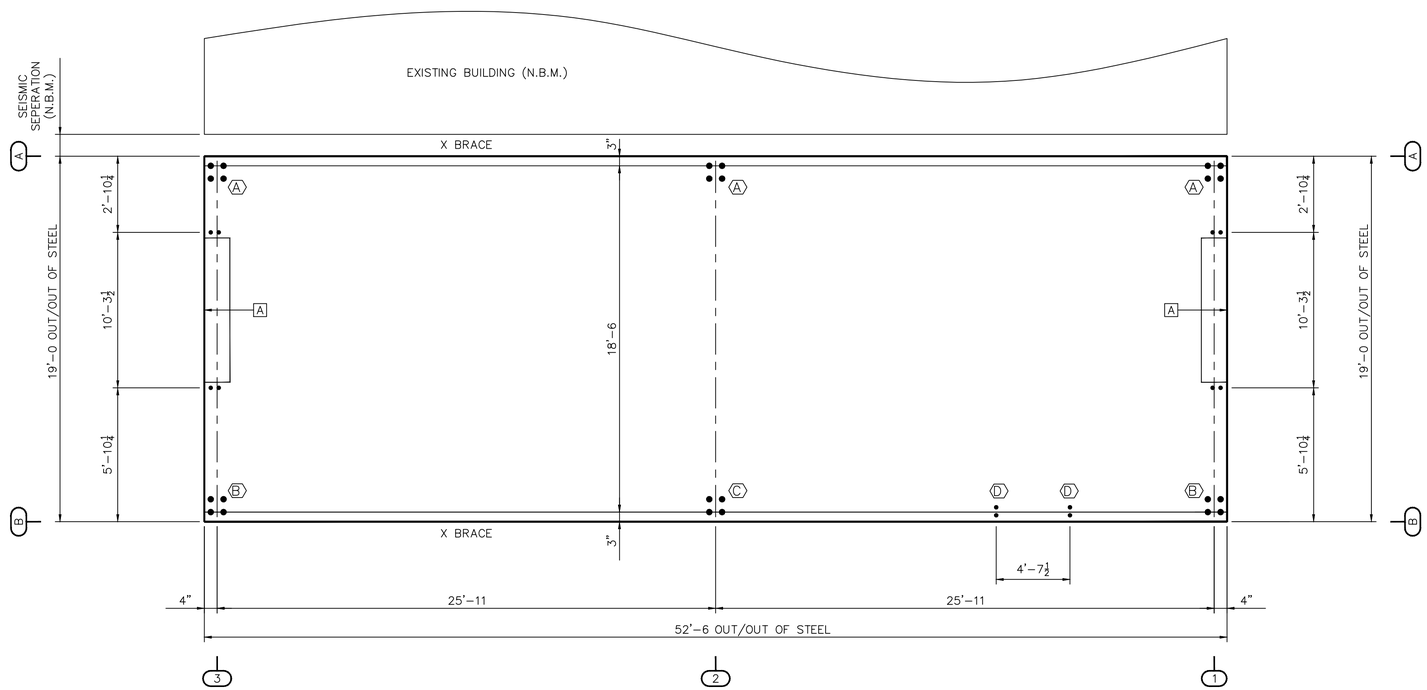

ANCHOR ROD SETTING PLAN

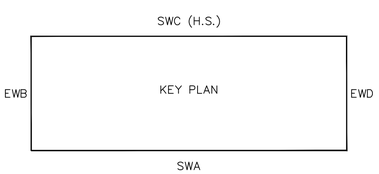

ACCESSORY SCHEDULE			
MARK	DESCRIPTION	DETAIL	QUAN.
A	10'–0 X 10'–0 FRAMED OPENINGS	E	2

ANCHOR BOLTS TO BE DESIGNED BY FOUNDATION ENGINEER USING DIAMETERS SHOWN IN THIS TABLE.

ANCHOR ROD DESCRIPTION	QUANTITY
⅝"ø DIAMETER X	12
¾"ø DIAMETER X	24

Revision	Date	Description	By	Ck'd

ASTAR BUILDING SYSTEMS® AN NCI COMPANY
P.O. BOX 94910
OKLAHOMA CITY, OK 73143
(405) 636–2010

Customer: ENTELEN DESIGN–BUILD LLC
SANDY, UT

Project Name & Location: RIVERTON MOTORS
ELKO, NV

Drawing Status:
☐ Preliminary (Not For Construction)
☐ For Approval (Not For Construction)
☐ For Construction Permit
☒ For Erector Installation

Scale:	NOT TO SCALE	
Drawn by:	JDR	9/1/15
Checked by:	DDB	9/1/15
Project Engineer:	RM	
Job Number:	14–B–95580	
Sheet Number:	F1 of 2	

The engineer whose seal appears hereon is an employee for the manufacturer for the materials described herein. Said seal or certification is limited to the products designed and manufactured by manufacturer only. The undersigned engineer is not the overall engineer of record for this project.

DRSTIC ENSTIB

FRAME ID #2 ss 19./11.958/13.292 20./11 | USER NAME: rwma JOB NAME: 95580B | DATE: 8/27/15 FILE: frames_1_3.fra | PAGE: 2-2

SUPPORT REACTIONS FOR EACH LOAD GROUP
*LOCATION: Gridlines: 1 3
NOTES: (1) All reactions are in kips and kip-ft. TIME: 15:01:54
(2) The seismic overstrength factor (Omega) is not included in the "RBDWEQ" and "RBUPEQ" Load Group reactions.
Seismic "BASE-ONLY" combination reactions include an overstrength factor of: 2.000

REACTION NOTATIONS

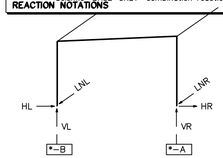

LOAD GROUP REACTION TABLE * = 1 3

COLUMN	*-B			*-A		
LOAD GROUP	HL	VL	LNL	HR	VR	LNR
DL	0.1	0.6	0.0	-0.1	0.6	0.0
COLL	0.1	0.6	0.0	-0.1	0.6	0.0
SNOW	0.5	2.7	0.0	-0.5	2.7	0.0
LL	0.5	2.4	0.0	-0.5	2.4	0.0
EQ	-0.2	-0.2	0.0	-0.2	0.2	0.0
RBUPEQ	0.0	-0.3	-0.8	-0.0	-0.3	-0.8
WL1	-1.9	-3.8	0.0	-1.1	-1.4	0.0
WL2	-2.2	-2.7	0.0	-0.8	-0.3	0.0
WL3	1.4	-1.2	0.0	2.0	-4.1	0.0
WL4	1.0	-0.0	0.0	2.4	-2.9	0.0
LWL1	0.4	-3.3	0.0	-0.3	-2.8	0.0
RBUPLW	0.0	-0.5	-1.3	-0.0	-0.6	-1.3
LWL2	0.4	-2.7	0.0	-0.3	-3.4	0.0
LWL3	0.6	-2.0	0.0	-0.6	-1.7	0.0
LWL4	0.6	-1.8	0.0	-0.6	-2.0	0.0
RBDWLW	-0.0	0.5	0.0	0.0	0.6	0.0
RBDWEQ	-0.0	0.3	0.0	0.0	0.3	0.0

LOAD GROUP DESCRIPTION

DL	:	Roof Dead Load
COLL	:	Roof Collateral Load
SNOW	:	Roof Snow Load
LL	:	Roof Live Load
EQ	:	Lateral Seismic Load [parallel to plane of frame]
RBUPEQ	:	Upward Acting Rod Brace Load from Longit. Seismic
WL1	:	Lateral Primary Wind Load
WL2	:	Lateral Primary Wind Load
WL3	:	Lateral Primary Wind Load
WL4	:	Lateral Primary Wind Load
LWL1	:	Longitudinal Primary Wind Load
RBUPLW	:	Upward Acting Rod Brace Load from Longitud. Wind
LWL2	:	Longitudinal Primary Wind Load
LWL3	:	Longitudinal Primary Wind Load
LWL4	:	Longitudinal Primary Wind Load
RBDWLW	:	Downward Acting Rod Brace Load from Longit. Wind
RBDWEQ	:	Downward Acting Rod Brace Load from Long. Seismic

FRAME ID #1 ss 19./11.958/32.396 20./11 | USER NAME: rwma JOB NAME: 95580B | DATE: 8/27/15 FILE: frame_2.fra | PAGE: 1-2

SUPPORT REACTIONS FOR EACH LOAD GROUP
*LOCATION: Gridlines: 2
NOTES: (1) All reactions are in kips and kip-ft. TIME: 15:01:48
(2) The seismic overstrength factor (Omega) is not included in the "RBDWEQ" and "RBUPEQ" Load Group reactions.
Seismic "BASE-ONLY" combination reactions include an overstrength factor of: 2.000

REACTION NOTATIONS

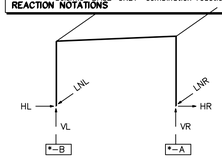

LOAD GROUP REACTION TABLE * = 2

COLUMN	*-B			*-A		
LOAD GROUP	HL	VL	LNL	HR	VR	LNR
DL	0.2	1.1	0.0	-0.2	1.1	0.0
COLL	0.3	1.5	0.0	-0.3	1.5	0.0
SNOW	1.4	6.5	0.0	-1.4	6.5	0.0
LL	0.8	3.7	0.0	-0.8	3.7	0.0
EQ	-0.5	-0.5	0.0	-0.4	0.5	0.0
RBUPEQ	0.0	-0.3	-0.8	-0.0	-0.3	-0.8
WL1	-3.1	-7.3	0.0	-1.5	-3.4	0.0
WL2	-3.6	-4.6	0.0	-1.0	-0.7	0.0
WL3	1.9	-2.9	0.0	3.4	-7.7	0.0
WL4	1.4	-0.3	0.0	3.9	-5.0	0.0
LWL1	0.5	-7.9	0.0	-0.2	-6.9	0.0
RBUPLW	0.0	-0.5	-1.3	-0.0	-0.6	-1.3
LWL2	0.5	-6.6	0.0	-0.2	-8.2	0.0
LWL3	1.0	-4.8	0.0	-0.9	-4.3	0.0
LWL4	1.0	-4.2	0.0	-0.9	-4.8	0.0
RBDWLW	-0.0	0.5	0.0	0.0	0.6	0.0
RBDWEQ	-0.0	0.3	0.0	0.0	0.3	0.0

LOAD GROUP DESCRIPTION

DL	:	Roof Dead Load
COLL	:	Roof Collateral Load
SNOW	:	Roof Snow Load
LL	:	Roof Live Load
EQ	:	Lateral Seismic Load [parallel to plane of frame]
RBUPEQ	:	Upward Acting Rod Brace Load from Longit. Seismic
WL1	:	Lateral Primary Wind Load
WL2	:	Lateral Primary Wind Load
WL3	:	Lateral Primary Wind Load
WL4	:	Lateral Primary Wind Load
LWL1	:	Longitudinal Primary Wind Load
RBUPLW	:	Upward Acting Rod Brace Load from Longitud. Wind
LWL2	:	Longitudinal Primary Wind Load
LWL3	:	Longitudinal Primary Wind Load
LWL4	:	Longitudinal Primary Wind Load
RBDWLW	:	Downward Acting Rod Brace Load from Longit. Wind
RBDWEQ	:	Downward Acting Rod Brace Load from Long. Seismic

NOTES

1) THE REACTIONS PROVIDED ARE BASED ON THE ORDER DOCUMENTS AT THE TIME OF MAILING. ANY CHANGES TO BUILDING LOADS OR DIMENSIONS MAY CHANGE THE REACTIONS. THE REACTIONS WILL BE SUPERSEDED AND VOIDED BY ANY FUTURE MAILING.
2) THE REACTIONS PROVIDED HAVE BEEN CREATED WITH THE FOLLOWING LAYOUT (UNLESS NOTED OTHERWISE).
a) A REACTION TABLE IS PROVIDED WITH THE REACTIONS FOR EACH LOAD GROUP.
b) RIGID FRAMES
(1) GABLED BUILDINGS
(a) LEFT AND RIGHT COLUMNS ARE DETERMINED AS IF VIEWING THE LEFT SIDE OF THE BUILDING, AS SHOWN ON THE ANCHOR ROD DRAWING, FROM THE OUTSIDE OF THE BUILDING.
(b) INTERIOR COLUMNS ARE SPACED FROM LEFT SIDE TO RIGHT SIDE.
(2) SINGLE SLOPE BUILDINGS
(a) LEFT COLUMN IS THE LOW SIDE COLUMN.
(b) RIGHT COLUMN IS THE HIGH SIDE COLUMN.
(c) INTERIOR COLUMNS ARE SPACED FROM LOW SIDE TO HIGH SIDE.
c) ENDWALLS
(1) LEFT AND RIGHT COLUMNS ARE DETERMINED AS IF VIEWING THE WALL FROM THE OUTSIDE.
(2) INTERIOR COLUMNS ARE SPACED FROM LEFT TO RIGHT.
d) ANCHOR ROD SIZE IS DETERMINED BY SHEAR AND TENSION AT THE BOTTOM OF THE BASE PLATE. THE LENGTH OF THE ANCHOR ROD AND METHOD OF LOAD TRANSFER TO THE FOUNDATION ARE TO BE DETERMINED BY THE FOUNDATION ENGINEER.
e) ANCHOR RODS ARE ASTM F1554 Gr. 36 MATERIAL UNLESS NOTED OTHERWISE ON THE ANCHOR ROD LAYOUT DRAWING.
f) X-BRACING
(1) ROD BRACING REACTIONS HAVE BEEN INCLUDED IN VALUES SHOWN IN THE REACTION TABLES.
(2) FOR IBC AND UBC BASED BUILDING CODES, WHEN X-BRACING IS PRESENT IN THE SIDEWALL, INDIVIDUAL LONGITUDINAL SEISMIC LOADS (RBUPEQ AND RBDWEQ) DO NOT INCLUDE THE AMPLIFICATION FACTOR, Ω_0.
(3) FOR CANADA BUILDING CODE (NBC), WHEN X-BRACING IS PRESENT IN THE SIDEWALL OR ENDWALL, INDIVIDUAL LONGITUDINAL SEISMIC LOADS (RBUPEQ & RBDWEQ) ARE MULTIPLIED BY FORCE REDUCTION FACTOR, Rd, WHEN SPECIFIED SHORT-PERIOD SPECTRAL ACCELERATION RATIO $I_E F_a S_a(0.2)$ IS GREATER THAN 0.45.
3) REACTIONS ARE PROVIDED AS UN-FACTORED FOR EACH LOAD GROUP APPLIED TO THE COLUMN. THE FOUNDATION ENGINEER WILL APPLY THE APPROPRIATE LOAD FACTORS AND COMBINE THE REACTIONS IN ACCORDANCE WITH THE BUILDING CODE AND DESIGN SPECIFICATIONS TO DETERMINE BEARING PRESSURES AND CONCRETE DESIGN. THE FACTORS APPLIED TO LOAD GROUPS FOR THE STEEL COLUMN DESIGN MAY BE DIFFERENT THAN THE FACTORS USED IN THE FOUNDATION DESIGN.
a) FOR PROJECTS USING ULTIMATE DESIGN WIND SPEEDS SUCH AS 2012 IBC OR 2010 FLORIDA BUILDING CODE, THE WIND LOAD REACTIONS ARE AT A STRENGTH VALUE WITH A LOAD FACTOR OF 1.0.
THE MANUFACTURER DOES NOT PROVIDE "MAXIMUM" LOAD COMBINATION REACTIONS. HOWEVER, THE INDIVIDUAL LOAD REACTIONS PROVIDED MAY BE USED BY THE FOUNDATION ENGINEER TO DETERMINE THE APPLICABLE LOAD COMBINATIONS FOR HIS/HER DESIGN PROCEDURES AND ALLOW FOR AN ECONOMICAL FOUNDATION DESIGN.

Revision	Date	Description	By	Ck'd

STAR BUILDING SYSTEMS® AN NCI COMPANY
P.O. BOX 94910
OKLAHOMA CITY, OK 73143
(405) 636-2010

Customer: ENTELEN DESIGN-BUILD LLC
SANDY, UT

Project Name & Location:
RIVERTON MOTORS
ELKO, NV

Drawing Status:
☐ Preliminary (Not For Construction)
☐ For Approval (Not For Construction)
☐ For Construction Permit
☒ For Erector Installation

Scale: NOT TO SCALE
Drawn by: JDR 9/1/15
Checked by: DDB 9/1/15
Project Engineer: RM
Job Number: 14-B-95580
Sheet Number: F2 of 2

The engineer whose seal appears hereon is an employee for the manufacturer for the materials described herein. Said seal or certification is limited to the products designed and manufactured by manufacturer only. The undersigned engineer is not the overall engineer of record for this project.

DRSTIC ENSTIB